TREATMENT BMP DESIGN GUIDELINES

Vegitated Filter Strips **P-3**
Grass Swales **P-17**
Infiltration Trench **P-29**
Infiltration Basin **P-41**
Bioretention **P-52**
Media Filter **P-63**
Extended Dry Detention **P-77**
Wet Detention Pond **P-88**
Stormwater Wetland **P-101**
Pervious Pavement **P-114**
Proprietary Structural Treatment Control **P-127**
Forebays **P-132**
Principal Spillway **P-150**

Vegetated Filter Strip

OVERVIEW

Source: Nebraska Department of Roads (NDOR)

Definition

Vegetated filter strips are strips of dense vegetation, typically grass, designed to filter and infiltrate sheet flow from upgradient development. Vegetated filter strips can be located between a pavement surface and a surface water collection system, such as a swale, pond, or river, or as pre-treatment to downstream stormwater BMPs.

Benefits

- Filters sediment and trash.
- Provides green space available for snow storage.
- Has low design, installation, and maintenance costs.
- Can be used on roadside embankments, reducing additional right-of-way needs.

Overview Table

Associated Costs	L	M	H
Design	X		
Construction	X		
Maintenance	X		
Pollutant Removal	**L**	**M**	**H**
Suspended Solids			X
Nutrients		X	
Heavy Metals		X	
Hydrocarbons		X	

Limitations

- Dense vegetated cover is required to remove pollutants and protect from erosion.
- Space for filter strips is often limited in urban areas.
- There is limited treatment on steep slopes or large impervious areas with high velocity runoff.
- Vegetated filter strips are effective only where runoff entering and flowing through the strip remains as sheet flow.

Vegetated Filter Strip

BEST MANAGEMENT PRACTICE (BMP) DESCRIPTION

A vegetated filter strip is a densely vegetated strip, usually consisting of grasses, designed to accept sheet flow from upgradient development and filter and infiltrate stormwater. Filter strips are different from grass swales in that they are designed to accommodate overland (sheet) flow rather than channelized or concentrated flow.

BMP Components

Soils – The soil(s) of concern for the Vegetated Filter Strip BMP are from finished grade to a depth of three feet. Also of concern is the level of compaction that these soils have, or undergo, during construction. The type and condition of the soils impact the rate of infiltration and partially determine the density of vegetation. Refer to the project geotechnical report and the United States Department of Agriculture (USDA) Natural Resources Conservation Service (NRCS) Soil Survey for the project area to help determine project soil characteristics. Note any mixed and compacted soils for variability in soil characteristics.

Slope – Vegetated filter strips are designed to have enough slope to keep water moving across the strip and avoid ponding but not too much slope so that the water moves too quickly. The filter strip is uniformly graded to maintain sheet flow.

Vegetation – The purpose of the vegetation is to effectively bind the soil, reduce velocities, and uptake water and some nutrients. A dense stand of vegetation that is drought tolerant, durable, and erosion resistant is desired. Salt tolerance, water, and nutrient needs should also be considered when selecting vegetation. The selection of seed, sod, and plantings will generally fall under the responsibility of the Roadside Stabilization Unit although there may be exceptions. Refer to NDOR's *Plan for the Roadside Environment*, June 2008, for region-specific information on vegetation.

Length – The length of the vegetated filter strip is measured in the direction of flow and depends on the slope of the filter strip and Manning's coefficient.

Width – The width of the vegetated filter strip is measured perpendicular to flow and is determined by the upgradient drainage area and the ability to distribute the flow as uniform sheet flow to the filter strip.

Level Spreader – A level spreader is a stormwater feature that receives concentrated, potentially erosive runoff and releases it as sheet flow uniformly over a stabilized area.

Vegetated Filter Strip

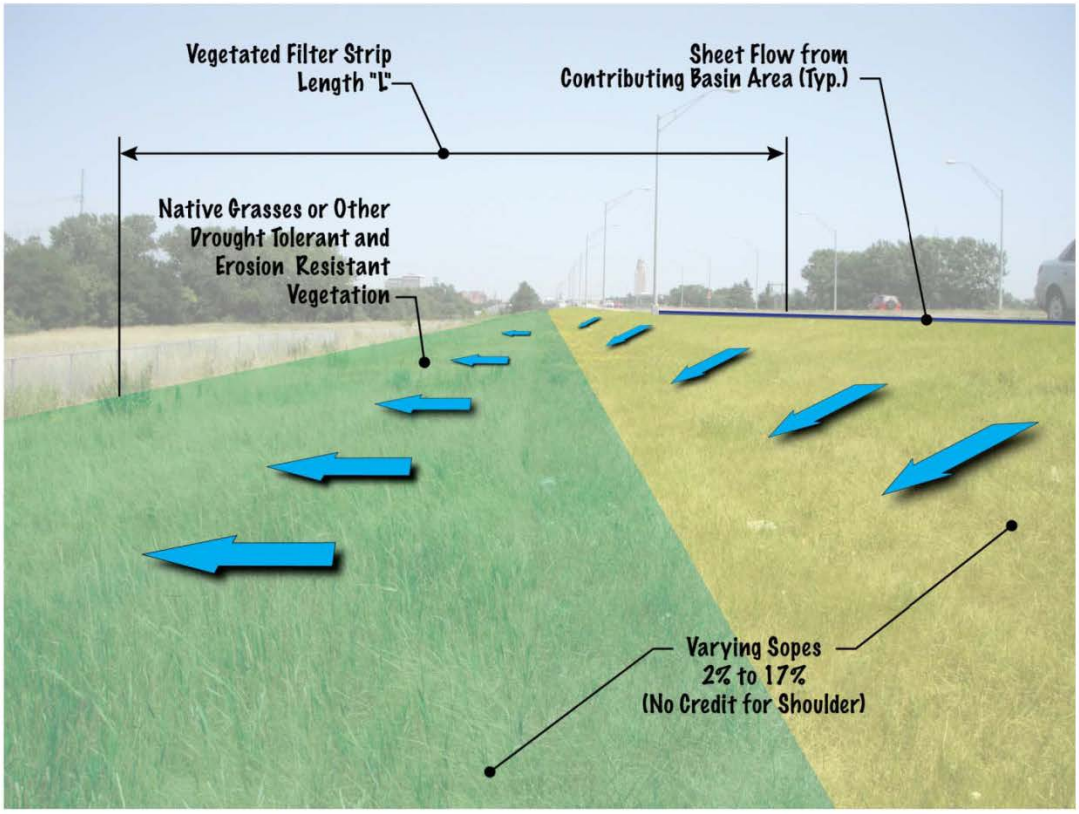

Vegetated Filter Strip Example
Not to Scale

Vegetated Filter Strip

DESIGN CONSIDERATIONS

Questions to ask yourself…

- Q. Can I distribute flow evenly across the filter strip?
- Q. Is a level spreader needed to help distribute flow?
- Q. What is the slope of the proposed surface for the vegetated filter strip?
- Q. What types of soils are on the site and are they compacted?

Site characteristics are very important when designing vegetated filter strips and should be taken into consideration early in the design process.

Sheet flow, distributed evenly across and through the filter strip, is required to effectively treat runoff. Because higher runoff rates and increased depths reduce the effectiveness of treatment, the drainage area upgradient of the vegetated filter strip is limited.

Vegetated filter strips should be used only where the topography of the site allows appropriate slope and sheet flow can be distributed evenly across the filter strip. Grading and level spreaders are often used to create a uniformly sloping area to distribute runoff evenly across the length of the strip.

Vegetated roadway shoulders adjacent to a vegetated filter strip should be graded below the pavement surface at the edge of the roadway to allow for future sediment deposition and still maintain sheet flow into the filter strip. The length of vegetated roadway shoulders, measured in the direction of flow, is designed according to minimum roadway design standards but should not be included in calculating the vegetated filter strip length.

Where flows are concentrated, a level spreader should be used to distribute flows evenly across the width of the vegetated filter strip. One type of level spreader is an excavated trench running along the upgradient end of the vegetated filter strip that is filled with pea-gravel or other free-draining aggregate. For aggregate gradations with a maximum size equal to or greater than ½ inch, a non-woven filter fabric is needed along the sides and bottom of a trench to reduce the potential for migration of fines into the aggregate. The surface of the trench should be level.

The length of the vegetated filter strip depends on the slope of the filter strip. Charts and equations have been provided to determine the minimum length. The filter strip slope should be greater than 2 percent so that flow is conveyed away from the source but less than 17 percent (or 6H:1V) to keep velocities fairly low. Keep in mind that steeper slopes are less effective at treatment and will require a longer length to provide the necessary removals. Additionally, the charts and equations assume that surface soils are not compacted and have the ability to infiltrate stormwater.

Soils that have been compacted will need to be loosened to improve infiltration and increase water quality treatment effectiveness. The depth that should be disced or tilled is based on the estimated depth of compaction. Areas that have been disturbed as a result of construction traffic and staging should be disced or tilled along with any fill areas. Finished grades should be amended with topsoil.

Vegetated Filter Strip

DESIGN CRITERIA:

Description	Value
Maximum Length of Contributing Pavement in the Direction of Flow	75 feet (Upgradient from the Vegetated Filter Strip) (Based on maximum flow rate of ** per foot of filter strip width)
Slope	2% - 17%
Minimum Length (direction of flow)	20 feet (see graph provided below)
Maximum Length (direction of flow)	100 feet (channelization concerns beyond this)
Minimum Width (perpendicular to flow)	Typically the same as adjacent contributing basin area
Maximum Flow Depth	0.1 feet

DESIGN PROCEDURE:

Step 1: Calculate the maximum discharge loading rate

Modify Manning's equation to calculate maximum discharge loading per foot of filter strip width (measured perpendicular to flow).

$$Q = 1.486/n * R^{2/3} * S^{1/2} * A$$

Q = Discharge rate (cfs)

A = flow area (ft^2) = wD (approximate for shallow flow)

D = flow depth (ft) (maximum allowable depth 0.1 feet)

n = Manning's coefficient (for sheet flow)

- n = 0.15 for Short Grass Prairie
- n = 0.24 for Dense Grass

R = hydraulic radius (ft) = A/WP

WP = Wetted Perimeter = w (approximate for shallow flow)

w = width (ft) (perpendicular to flow)

S = slope (ft/ft) (in the direction of flow)

Simplify the equation using the assumptions provided above to solve for maximum discharge loading rate:

$$q = \frac{Q}{w} = \frac{1.486 * D^{5/3} * S^{1/2}}{n}$$

q = maximum discharge loading rate per foot of filter strip (cfs/ft)

Vegetated Filter Strip

Step 2: Calculate Water Quality Volume Discharge Rate (Q_{WQ})

Calculate Q_{WQ} using the NRCS Curve Number (CN) Procedure as described in Chapter 3 of NDOR's Drainage *Design and Erosion Control Manual* **OR** limit the length of contributing pavement to 75 feet as provided in the design criteria table.

Step 3: Calculate the minimum width of vegetated filter strip and level spreader (if needed)

$$w_{min} = \frac{Q_{WQ}}{q}$$

w_{min} = minimum width of filter strip (ft)
(and level spreader if needed)

Step 4: Calculate the length of vegetated filter strip

The length of vegetated filter strip, measured in the direction of flow, is based on the following travel time equation. A graph is provided as well to help determine the minimum filter strip length.

$$L_f = \frac{T_t^{5/4} * P_{WQ}^{5/8} * S_{\%}^{1/2}}{3.34 * n}$$

L_f = minimum length of vegetated filter strip (ft)

T_t = travel time through filter strip (5 min)

P_{WQ} = rainfall depth (0.75 inch)

(P_{WQ} based on criteria for determination of Q_{WQ} as described in Chapter 3 of NDOR's *Drainage Design and Erosion Control Manual*)

$S_{\%}$ = slope (percent)

n = Manning's coefficient

- n = 0.15 for Short Grass Prairie
- n = 0.24 for Dense Grass

For vegetated filter strips with multiple slopes, the designer should determine the travel time through the upgradient slope (T_{t1}) using the available length of the upgradient filter strip (L_{f1}).

$$T_{t1} = ((L_{f1} * 3.34 * n)/(P_{WQ}^{5/8} * S_{\%}^{1/2}))^{4/5}$$

T_{t1} = travel time through upgradient filter strip (min)

L_{f1} = length of upgradient filter strip (ft)

If the time is less than 5 minutes, then calculate the length of the downgradient slope (L_{f2}) using the remaining time (T_{t2}) in the equation above. Solve for the remaining time for water quality treatment:

Vegetated Filter Strip

$$T_{t2} = T_t - T_{t1}$$

T_{t2} = travel time through downgradient filter strip (min)

Solve for the minimum length of the downgradient filter using the equation provided above:

$$L_{f2} = \frac{T_t^{5/4} * P_{WQ}^{5/8} * S_{\%}^{1/2}}{3.34 * n}$$

L_{f2} = minimum length of down-gradient filter strip (ft)

Use the following graph, together with the proposed vegetated filter strip slope and Manning's coefficient, to determine the minimum filter strip length, L_f. For vegetated filter strips with multiple slopes, the graph may be used to calculate L_{f2}.

Figure 1. Vegetated Filter Strip Length as a Function of Slope and Manning's Coefficient (Using T_t = 5 minutes)

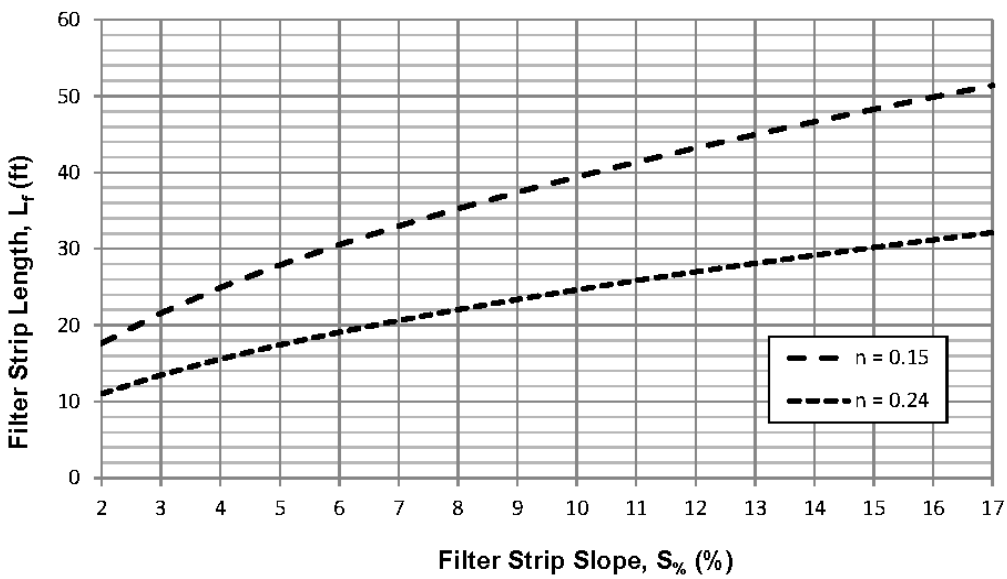

Vegetated Filter Strip

DESIGN EXAMPLE

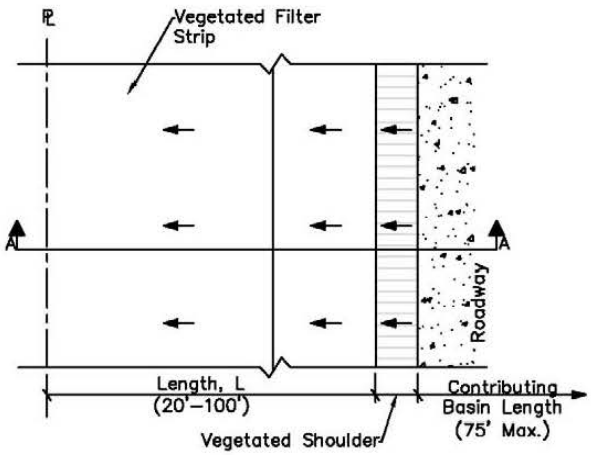

Vegetated Filter Strip
Plan View
No Scale

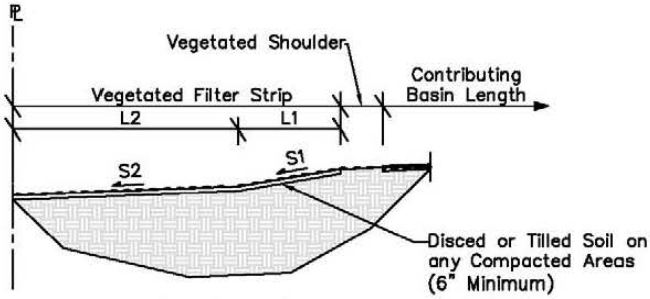

Section A–A
No Scale

Vegetated Filter Strip

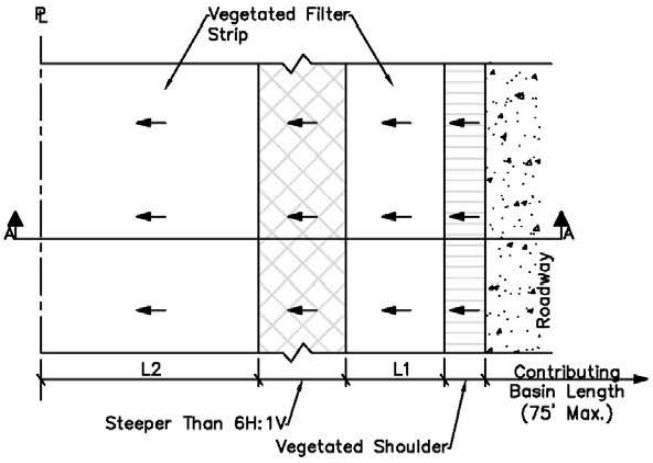

Vegetated Filter Strip
(6H:1V Into Steeper Section)
Plan View
No Scale

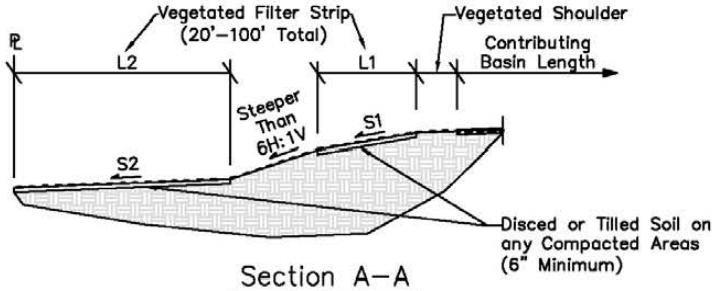

Section A–A
No Scale

Vegetated Filter Strip

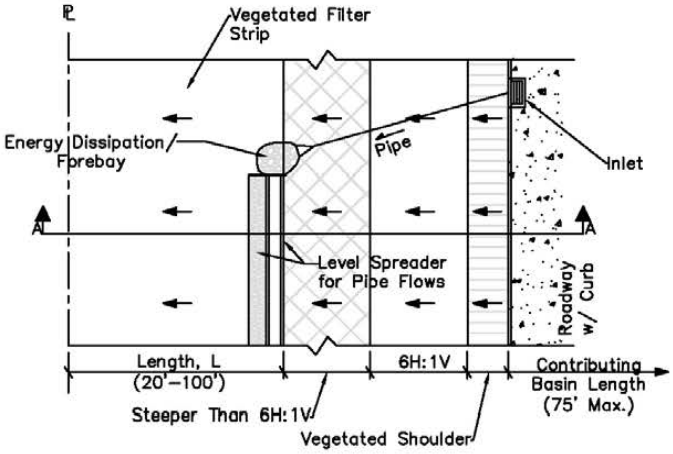

Vegetated Filter Strip
(with Level Spreader for Pipe Flows)
Plan View
No Scale

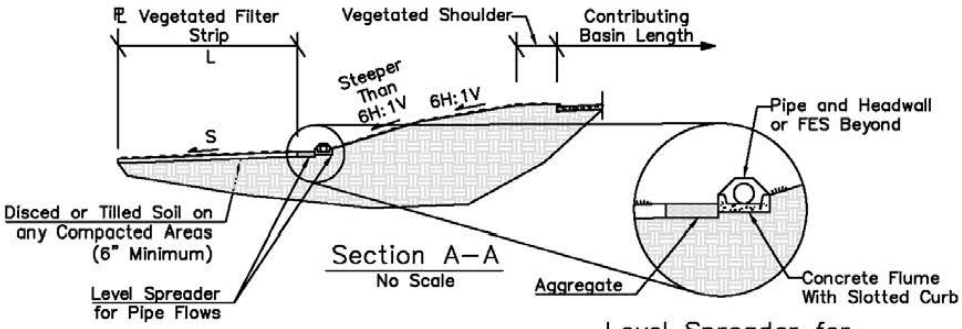

Section A–A
No Scale

Level Spreader for Pipe Flows
No Scale

Vegetated Filter Strip

CONSTRUCTION CONSIDERATIONS

For vegetated filter strips, the following should be considered during design, as well as added into design plans and specifications as necessary.

- Avoid overcompaction of soils in the filter strip during construction to preserve infiltration activities.
- Because the final grade of the filter strip is critical, inspect the filter area before placing seed or sod to ensure appropriate grading. Oftentimes, following soil amendment and placement of sod, the final grade is too high to accept sheet flow.
- Install filter strips at a time of year when there is a reasonable chance of successful establishment without irrigation. Rainfall in any given year may not be sufficient and temporary irrigation may be required.
- Implement erosion controls to protect seeds for at least 75 days after the first rainfall of the season.
- Maintain erosion and sediment control measures on upgradient disturbed areas to prevent excessive sediment loading to filter strip.
- If sod is used, place sod tiles so that there are no gaps in between tiles. Stagger the ends of the tiles to prevent formation of channels along the strip.
- Use a roller on the sod to ensure that no air pockets form between the soil and the sod but be sure not to overcompact the soil.
- Perform soil amending, fine grading, and seeding only after contributing drainage areas have been stabilized and any work crossing the filter has been completed.
- Include directions in the specifications for use of appropriate fertilizer and soil amendments based on soil properties determined through testing and compared to the needs of the vegetation requirements.
- Delineate undisturbed natural areas of vegetation that have been identified on the plans with flagging before beginning construction activities.
- Ensure that other sediment control measures to be used in conjunction with the filter strip are in place and functioning properly.
- Minimize construction activities and traffic in the filter strip and immediate surrounding areas.
- Consider the timing of permanent seeding and whether or not temporary irrigation may be needed to help establish seeds.

Vegetated Filter Strip

MAINTENANCE AND INSPECTION REQUIREMENTS

The maintenance objectives for vegetated filter strips include providing litter control, keeping up the hydraulic and removal efficiency of the filter strip by repairing erosion and removing sediments or other obstructions, and maintaining a dense, healthy grass cover.

Frequency	Inspection and Maintenance Activity
After Construction (While NPDES Permit is Open)	• Inspect filter strip bi-weekly to ensure the intended vegetation is establishing well. Consider reseeding if needed. • Inspect filter strip bi-weekly for erosion and damage by equipment or vehicles after every major rainfall event (≥ ½ inch). Repair as needed. • Remove trash and debris accumulated in the filter strip.

Quarterly (Through First Two Years of Establishment)	• Inspect filter strip to ensure there is a dense, uniform stand of the intended vegetation. Reseed as needed.
	• Mow grass up to four times annually to control weeds.
	  ○ Mow grass to a height not less than 6 inches.
	  ○ Do not let the weeds get over the 12-inch maximum height before mowing.
	• Inspect filter strip for erosion and damage by equipment or vehicles. Repair as needed.
	• Inspect filter strip for sediment buildup, particularly along edge of pavement, and ponding or obstructions to ensure uniform sheet flow. Remove sediment once it has accumulated.
	• Inspect any level spreaders for uniformity, clogging, and sediment buildup. Replace first layer of aggregate if clogging appears to be only at the surface.
	• Remove trash and debris accumulated in the filter strip.

Vegetated Filter Strip

Frequency	Inspection and Maintenance Activity
Annually (After First Two Years of Establishment)	• Inspect filter strip to ensure there is a dense, uniform stand of the intended vegetation. Consider reseeding if needed. • If mowing is needed, in medians or for other reasons. ○ Mow grass to a height not less than 6 inches. • Inspect filter strip for erosion and damage by equipment or vehicles. Repair as needed. • Inspect filter strip for sediment buildup, particularly along edge of pavement, and ponding or obstructions to ensure uniform sheet flow. Remove sediment once it has accumulated. • Inspect any level spreaders for uniformity, clogging, and sediment buildup. Replace first layer of aggregate if clogging appears only to be at the surface. • Remove trash and debris accumulated in the filter strip.

RESOURCES AND REFERENCES

Arizona Department of Transportation, *ADOT Post-Construction Best Management Practices Manual*. July 2009.

Atlanta Regional Commission. *Georgia Stormwater Management Manual – Volume 2: Technical Handbook*. August 2001.

California Department of Transportation. *BMP Retrofit Pilot Program – Final Report*. January 2004.

Iowa State University – Institute for Transportation. *Iowa Stormwater Management Manual*. October 2009.

Minnesota Pollution Control Agency. *Protecting Water Quality in Urban Areas - Best Management Practices for Dealing with Storm Water Runoff from Urban, Suburban and Developing Areas of Minnesota*. March 2000.

Nebraska Department of Roads. *Drainage Design and Erosion Control Manual*. August 2006.

Nebraska Department of Roads. *Highway Mowing Guidelines*. Downloaded February 2012.

Nebraska Department of Roads. *Plan for the Roadside Environment*. June 2008.

State of New Jersey. *New Jersey Stormwater Best Management Practice Manual*. February 2004.

StormwaterPA. *Pennsylvania Stormwater Best Management Practices Manual*. December 2006.

United States Environmental Protection Agency. *National Pollutant Discharge Elimination System (NPDES) Menu of BMPs*. Website Updated January 2008.

Urban Drainage and Flood Control District. *Urban Storm Drainage Criteria Manual Volume 3*. 2010.

Grass Swale

OVERVIEW

Source: Nebraska Department of Roads (NDOR)

Definition

A grass swale is a densely vegetated drainage way with low pitched side slopes designed to convey runoff slowly. Grass swales are typically used in the following situations:

- Highways, interchanges, and facilities
- Small drainage areas
- Retrofit for a roadside ditch

Benefits

- Removes sediment and associated constituents through filtering.
- Reduces the length of storm sewer systems in upper portions of a watershed.
- Provides a less expensive and more attractive conveyance element.
- Can help reduce runoff volumes.

Overview Table

Associated Costs	L	M	H
Design	X		
Construction	X		
Maintenance	X		
Pollutant Removal	**L**	**M**	**H**
Suspended Solids			X
Nutrients	X	X	
Heavy Metals		X	X
Hydrocarbons		X	X

Limitations

- Grass swales require more area than traditional storm sewers.
- Erosion problems may occur if not designed and constructed properly.
- Performance is affected by length, depth, vegetation density and season of the year.
- Infiltration rates depend on soil types.

Grass Swale

BEST MANAGEMENT PRACTICE (BMP) DESCRIPTION

Grass swales are densely vegetated drainage ways and channels designed to convey runoff slowly. Grass swales have low longitudinal slopes and broad cross-sections that convey flow in a slow and shallow, facilitate sedimentation, infiltration, and filtration (straining).

Grass swales are primarily online stormwater treatment practices that convey runoff from larger storm events. They can receive runoff from point discharges, such as outfalls, as well as overland sheet flow from adjacent slopes and roadsides. They work well as pretreatment to and in conjunction with bioretention systems and other BMPs.

BMP Components

Soils – The types of soils on site will partially determine how much water will be infiltrated. Refer to the project geotechnical report and the United States Department of Agriculture (USDA) Natural Resources Conservation Service (NRCS) Soil Survey for the project area to help determine project soil characteristics. Note any mixed and compacted soils for variability in soil characteristics.

Longitudinal Slope – Grass swales are designed to have enough of a slope in the direction of flow to keep water moving through the swale and avoid ponding but not too much slope that the water moves too quickly causing erosion and limiting infiltration.

Side Slope – Side slopes are kept shallow, when possible, to reduce erosion potential and increase infiltration area. Swales should have side slopes no steeper than 3H:1V.

Vegetation – The purpose of the vegetation is to effectively bind the soil, reduce velocities, and uptake water and some nutrients. A dense stand of vegetation that is drought tolerant, durable, and erosion resistant is desired. Salt tolerance, water, and nutrient needs should also be considered when selecting vegetation. The selection of seed, sod, and plantings will generally fall under the responsibility of the Roadside Stabilization Unit (RSU) although there may be exceptions. Refer to NDOR's *Plan for the Roadside Environment*, June 2008, for region-specific information on vegetation.

Length – The minimum length of the grass swale is measured in the direction of flow depends on vegetation height, flow depth, and flow velocities.

Width – The swale bottom should be wide enough to convey smaller flows uniformly but not so wide as to encourage braided channels. Width is measured perpendicular to flow.

Water Quality Volume Discharge Rate Depth, D_{WQ} – The depth of flow in the swale based on the Water Quality Volume Discharge Rate (Q_{WQ}) as defined in Chapter 3 of NDOR's *Drainage Design and Erosion Control Manual*.

Total Depth, D – The total depth of the channel which typically includes capacity to handle runoff from larger storm events as defined in Chapter 1 of NDOR's *Drainage Design and Erosion Control Manual*.

Grass Swale

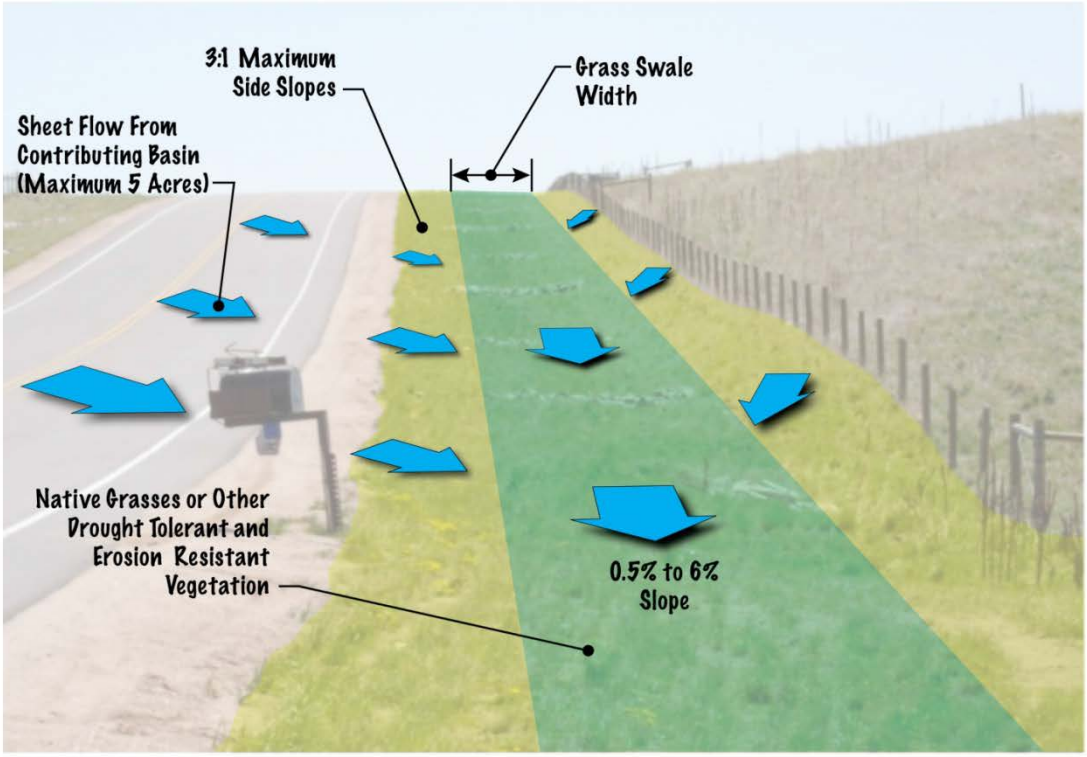

Grass Swale Example
Not to Scale

Grass Swale

DESIGN CONSIDERATIONS

Site characteristics are very important when designing grass swales and should be taken into consideration early in the design process.

Grass swales should be used only where the topography of the site allows appropriate slope and cross-sectional area for the swale.

Grass swales should be used only when the seasonally high groundwater table is at least 2 feet below the channel's flow line. Consider using stormwater wetlands for high groundwater conditions.

Questions to ask yourself…

Q. How much area is available for the proposed grass swale adjacent to the project?

Q. Is groundwater present in the vicinity of the proposed grass swale?

Q. What types of soils are on the site and are they compacted?

Q. How does the proposed grass swale section interact with other design storm considerations?

Q. What is the slope of the proposed surface for the grass swale and can velocities be reduced?

Soils that have been compacted should be loosened to improve infiltration and increase water quality treatment effectiveness. The depth that should be disced or tilled is based on the estimated depth of compaction and should include the sides, as well as the bottom of the swale. Areas that have been disturbed as a result of construction traffic and staging should be disced or tilled along with any fill areas. Finished grades should be amended with topsoil.

Because grass swales are typically online BMPs, they need to be designed to treat the Water Quality Volume Discharge Rate (Q_{WQ}) and pass the design storm discharged referenced in Chapter 1 of NDOR's *Drainage Design and Erosion Control Manual*. Grass swales should be used to treat small drainage areas of less than 5 acres.

When sizing the swale for the Water Quality Volume Discharge Rate, a maximum depth of flow of 4 inches is allowed, velocities should be less than or equal to 1 foot/second, and a travel time of 5 minutes or more is required. This allows sediment to drop out and improves infiltration and filtration. The designer will need to check velocities and permissible shear stress of the swale for erosive conditions from runoff during the design storm event. Energy dissipation should be provided at any outfalls discharging into the grass swale to reduce velocities. The use of any drops should provide energy dissipation as well.

Manning's coefficient "n" is an important parameter in sizing the swale and varies with the depth of flow and vegetative height and condition. For design purposes, assume a vegetative height of 6 inches. For flows less than or equal to 6 inches, as required for determining velocity for the Water Quality Volume Discharge Rate, use an "n" value of 0.15. For depths of flow greater than 4 inches, use an "n" value determined from Appendix B of NDOR's *Drainage Design and Erosion Control Manual*.

Grass Swale

DESIGN CRITERIA

Description	Value
Maximum Contributing Basin Area	5 acres
Longitudinal Slope	0.5% - 6%
Maximum Side Slopes of Swale	3:1
Bottom Width of Swale	2-10 feet
Design Storm	Water Quality Volume Discharge Rate, Q_{WQ}
Maximum Velocity for Q_{WQ}	1 foot/second
Maximum Depth for WQV Discharge Rate, D_{WQ}	4 inches
Minimum Travel Time for Q_{WQ}	5 minutes
Manning's Coefficient, n	0.15 (for flow depth ≤ 4 inches)

DESIGN PROCEDURE:

Step 1: Calculate Water Quality Volume Discharge Rate (Q_{WQ})

Calculate the water quality volume discharge rate using the NRCS Curve Number (CN) Procedure as described in Chapter 3 of NDOR's *Drainage Design and Erosion Control Manual* **OR** use Exhibit 3.5 - Water Quality Volumes and Peak Discharges for Selected Acreages for sites under 5 acres.

Step 2: Determine swale width using Q_{WQ}

Using Q_{WQ} from above, the slope (S) selected from (typically 1% to 4%), a Manning's "n" of 0.15, and a maximum water depth (D) of 4 inches (0.5 feet), calculate an appropriate width channel using the following modified form of Manning's equation:

$$Q_{WQ} = VA = 1.486/n * R^{2/3} * S^{1/2} * A$$

Q_{WQ} = WQV discharge rate (cfs)

V = velocity of flow (ft/s)

A = flow area (ft^2) = wD (approximate for shallow flow)

n = Manning's coefficient

R = hydraulic radius (ft) = A/WP

WP = Wetted Perimeter = w (approximate for shallow flow)

w = channel bottom width (ft)

D_{WQ} = flow depth for WQV discharge rate (ft)

(max. allowable depth 4 inches)

S = slope (ft/ft)

Grass Swale

Simplify equation using the assumptions provided above; solve for bottom width:

$$w = \frac{Q * n}{1.486 * D_{WQ}^{5/3} * S^{1/2}}$$ (check criteria for bottom width)

Step 3: Check velocity criteria

Using Q_{WQ} from above and cross-sectional area, solve for velocity:

$$V = \frac{Q_{WQ}}{w * D_{WQ}}$$

If velocity is too high for given criteria, consider reducing the slope, widening the channel, and, if close, calculating out wetted perimeter and hydraulic radius.

Step 4: Calculate minimum swale length

$$L_{min} = V * t_r * (60 \text{ s/min})$$

t_r = travel time (5 min)

Travel time is defined as the time it takes for runoff to travel from the upgradient end of the swale to the downgradient end of the swale.

Step 5: Check effective treatment of swale

Check that a minimum of 80 percent of the drainage area is captured upgradient from the upper limits of L_{min}.

$$\frac{A_{Lmin}}{A_{Total}} * 100 \geq 80\%$$

A_{Lmin} = Drainage area upgradient from the upper limits of the drainage way (assumed to be the treated area) (ac)

A_{Total} = Drainage area at the downstream end of the drainageway (ac)

If the percentage of the fully treated area is less than 80 percent, provide additional treatment for the remaining area (see diagram on next page).

Grass Swale

Figure 1. Drainage Area Diagram

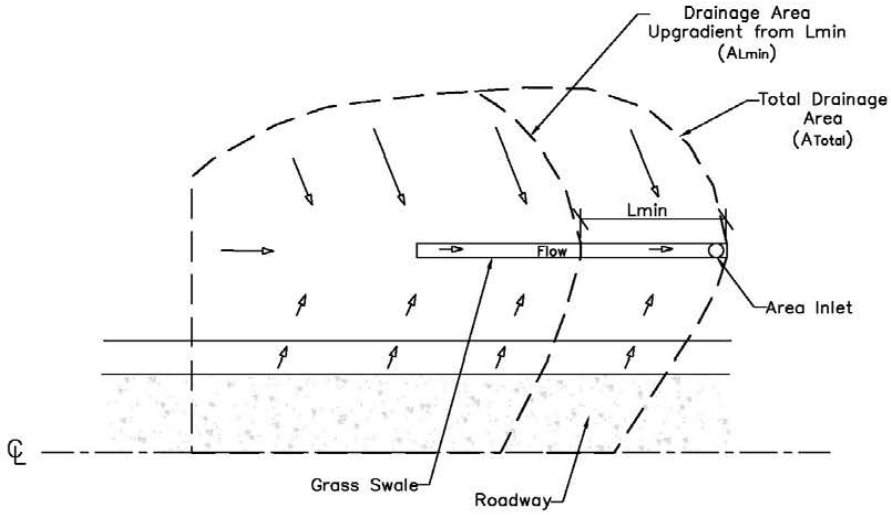

Step 6: Check capacity of swale and velocity for larger storm events

Reference Chapter 1 of NDOR's *Drainage Design and Erosion Control Manual* to check swale capacity and the velocities of larger storm events.

Grass Swale

DESIGN EXAMPLES

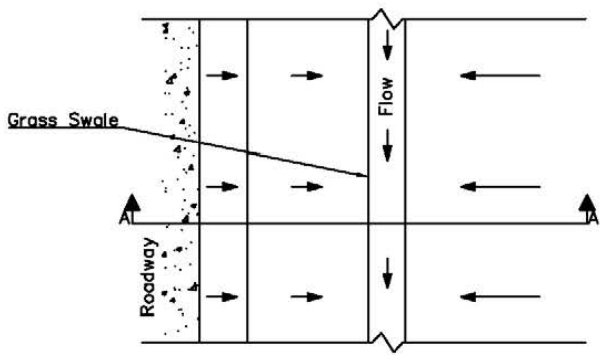

Grass Swale Along Backslope
Plan View
No Scale

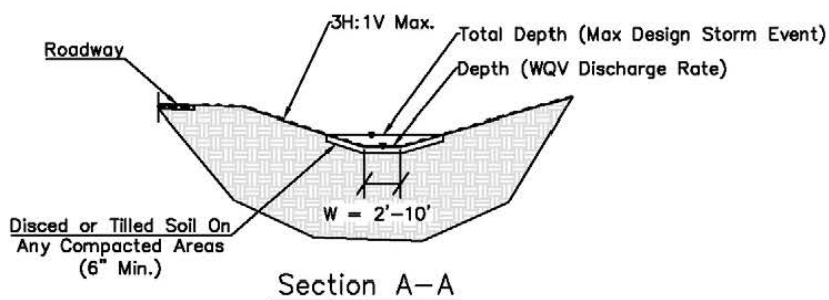

Section A–A
No Scale

Grass Swale

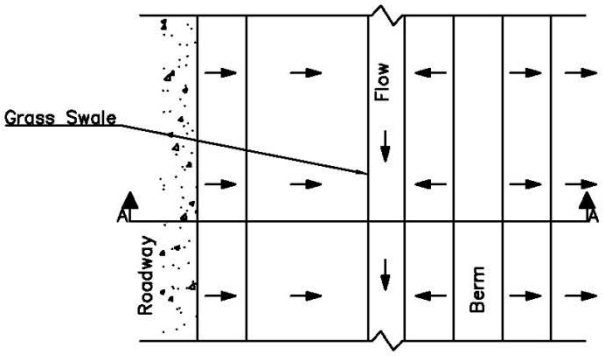

Grass Swale with Berm
Plan View
No Scale

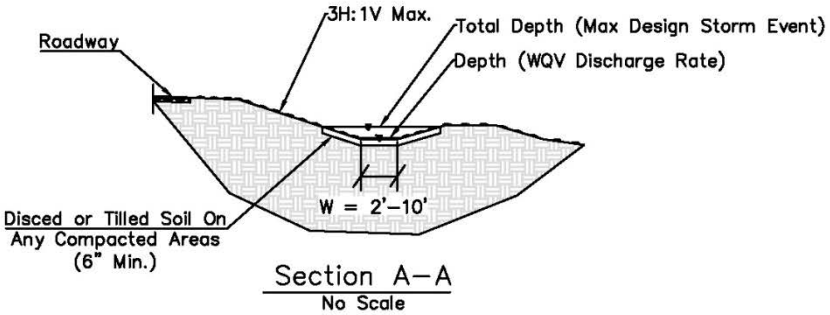

Section A–A
No Scale

Grass Swale

CONSTRUCTION CONSIDERATIONS

- Strip and stockpile topsoil before beginning earthwork and re-spread over finished areas, including the swale bottom and sides, to improve vegetative growth and infiltration.
- Perform fine grading, soil amendment, and seeding only after upgradient surfaces have been stabilized and utility work crossing the swale has been completed.
- Consider providing irrigation appropriate to the grass type.
- Weed the area during the establishment of vegetation by hand or by mowing. Mechanical weed control is preferred.
- Protect the swale from other construction activities.
- Include directions in the specifications for use of appropriate fertilizer and soil amendments based on soil properties and compared to the needs of the vegetation requirements.
- Install swales at the time of the year when there is a reasonable chance of successful vegetation establishment without irrigation; however, it is recognized that rainfall in a given year may not be sufficient and temporary irrigation may be used.
- If sod tiles must be used, place them so that there are no gaps between the tiles; stagger the ends of the tiles to prevent the formation of channels along the swale or strip.
- Use a roller on the sod to ensure that no air pockets form between the sod and the soil.
- Where seeding is used, erosion controls will be necessary to protect seeds until vegetation is well established.

Grass Swale

MAINTENANCE AND INSPECTION REQUIREMENTS

The maintenance objectives for vegetated swale systems include providing litter control, keeping up the hydraulic and removal efficiency of the swale by repairing erosion and removing sediments or other obstructions, and maintaining a dense, healthy grass cover.

Frequency	Inspection and Maintenance Activity
After Construction (While NPDES Permit is Open)	• Inspect swale bi-weekly to ensure the intended vegetation is establishing well. Consider reseeding if needed. • Inspect swale bi-weekly for erosion and any damage by equipment or vehicles after every major rainfall event (≥ ½ inch). Repair as needed. • Remove trash and debris accumulated in the swale.

Quarterly (Through First Two Years of Establishment)	• Inspect swale to ensure there is a dense, uniform stand of the intended vegetation. Consider reseeding if needed.
	• Mow grass to control weeds.
	  ○ Mow grass to a height not less than 6 inches.
	  ○ Do not let the weeds get over the 12-inch maximum height before mowing.
	• Inspect grass swale for erosion and damage by equipment or vehicles. Repair as needed.
	• Inspect swale for sediment buildup in the bottom of the swale. Remove sediment once it has accumulated.
	• Remove trash and debris accumulated in the swale.

Annually (After First Two Years of Establishment)	• Inspect swale to ensure there is a dense, uniform stand of the intended vegetation. Consider reseeding if needed. • If mowing is needed in medians or for other reasons. ○ Mow grass to a height not less than 6 inches. • Inspect grass swale for erosion and damage by equipment or vehicles. Repair as needed. • Inspect swale for sediment buildup in the bottom of the swale. Remove sediment once it has accumulated. • Remove trash and debris accumulated in the swale.

Grass Swale

RESOURCES AND REFERENCES

California Department of Transportation. *BMP Retrofit Pilot Program – Final Report*. January 2004.

California Department of Transportation. *California Stormwater BMP Handbook – New Development and Redevelopment*. January 2003

Iowa State University – Institute for Transportation. *Iowa Stormwater Management Manual*. October 2009.

Nebraska Department of Roads. *Drainage Design and Erosion Control Manual*. August 2006.

Nebraska Department of Roads. *Highway Mowing Guidelines*. Downloaded February 2012.

Nebraska Department of Roads. *Plan for the Roadside Environment*. June 2008.

United States Environmental Protection Agency. *National Pollutant Discharge Elimination System (NPDES) Menu of BMPs – Grassed Swales*. Website Updated January 2008.

United States Environmental Protection Agency. *Storm Water Technology Fact Sheet – Vegetated Swales*. *September 1999*.

Urban Drainage and Flood Control District. *Urban Storm Drainage Criteria Manual Volume 3*. 2010.

Wisconsin Department of Natural Resources. *Conservation Practice Standard – Vegetated Infiltration Swale*. May 2007.

Infiltration Trench

OVERVIEW

Source: Nebraska Department of Roads (NDOR)

Definition

Infiltration trenches temporarily store runoff in trenches filled with aggregate and infiltrate that runoff over a limited time period. Infiltration trenches are appropriate for smaller drainage areas. They are sited on relatively flat areas with porous soils.

Benefits

- Fexible system that can provide detention as well as water quality benefits in some cases.
- Provides for groundwater recharge.
- Can be configured in any shape to meet right-of-way restrictions.

Overview Table

Associated Costs	L	M	H
Design		X	
Construction			X
Maintenance		X	
Pollutant Removal	**L**	**M**	**H**
Suspended Solids			X
Nutrients		X	X
Heavy Metals			X
Hydrocarbons		X	

Limitations

- Infiltration trenches are not suitable in areas of compacted fill or low permeability soils.
- Infiltration trenches are not suitable in areas with a high groundwater table or groundwater contamination issues.
- Minimum setbacks must be met.
- Pretreatment is encouraged to help reduce the potential for clogging.

Infiltration Trench

BEST MANAGEMENT PRACTICE (BMP) DESCRIPTION

Infiltration trenches are aggregate-filled trenches that capture and store surface runoff from the contributing watershed allowing it to infiltrate into subsurface soils. Trash and debris are screened at the surface, and infiltration occurring through underlying soils provides additional treatment. Infiltration trenches are designed to capture the Water Quality Volume (WQV) and infiltrate that volume within a 48-hour period (72 hours maximum). In areas with sediment laden stormwater, pretreatment is necessary to minimize the potential for clogging, extend the life of the system, and provide additional stormwater treatment.

Infiltration trenches can be designed offline or online. In an online system, storage for WQV is provided in the aggregate voids below a set intake structure elevation. In an offline system, infiltration trenches may be used with other BMPs to provide peak flow control. Infiltration trenches can accept flow from an outfall as a point discharge or as sheet flow from adjacent runoff.

BMP Components

Pretreatment BMP – A Pretreatment BMP is one of any number of Treatment BMPs (vegetated filter strips, grass swales, forebays, etc.) which provides a gross reduction in the amount of trash and sediment carried by stormwater before it enters the infiltration trench. Placement of a Pretreatment BMP upgradient of the infiltration trench will reduce the likelihood of its clogging and failure. Many factors dictate the types of pretreatment BMP suitable for the site, including available space, an offline or online system, soil characteristics, site topography and cost. See the Treatment BMP design guidelines of the various systems for additional information on how to design the pretreatment.

Aggregate-Filled Trench – An aggregate-filled trench is an excavated area filled with aggregate that holds stormwater and allows it to infiltrate into groundwater over a specified amount of time. The aggregate should be free-draining aggregate with a suitable void ratio to provide space for storage. For aggregate gradations with a maximum size equal to or greater than ½ inch, a non-woven filter fabric is needed along the sides of the trench and a free-draining sand-gravel layer or non-woven filter fabric on the bottom to reduce the potential for migration of fines into the free-draining aggregate. The bottom of the trench should be level.

Berm – A berm is an earthen ridge used to contain, block and/or divert stormwater flows. Berms are frequently used in stormwater management design to contain and/or direct water quality flows into Treatment BMPs.

Soils – The soil(s) of concern for the Infiltration Trench BMP are located one foot above the base of the trench to five feet below. The permeability of these subsurface soils will determine the infiltration rate of the Treatment BMP and therefore the minimum size of the trench. Refer to the project geotechnical report and the United States Department of Agriculture (USDA) Natural Resources Conservation Service (NRCS) Soil Survey for the project area to help determine project soil characteristics for design.

Length-Width Dimensions – The length and width dimensions define the area of the bottom of the infiltration trench, which depends on the volume of storage needed, soil properties and

Infiltration Trench

available space. Length is defined as the longer axis in an x-y plane. Width is defined as the shorter axis in an x-y plane.

Depth – The depth of the infiltration trench generally depends on the volume of storage needed, soil infiltration rate, and available space. It can also be limited by shallow groundwater or bedrock. Depth is measured from the bottom of the excavation to the surface of backfilled material.

Observation Well – A 4" diameter observation well is recommended for every 5000 square feet of infiltration trench (L x W) so that the rate of infiltration can be observed as needed. The observation well is a slot-perforated drain pipe that extends from the bottom of the excavated trench to an elevation 6 inches above the surface of backfilled material. A fixed cap can be fitted to the bottom of the pipe or the pipe can rest on a steel or plastic foot plate. The top of the pipe has a removable locking cap.

Drawdown Pipe – Where grades allow, the designer should include a drawdown pipe that would allow any standing water in the infiltration trench to be drawn down in the event of plugging or repairs. The drawdown pipe system includes a section of slot perforated drain pipe placed on the bottom of the trench that connects to an adjustable valve followed by a non-perforated outlet pipe that that discharges to a sewer pipe or is daylighted. A riser pipe is used to access and open or close the adjustable valve. Drawdown pipes should be 4-inch diameter or larger.

Overflow Spillway – An overflow spillway is a protected area of the online Treatment BMP designed to convey peak discharges that exceed water quality events. Energy dissipation should be provided where velocities and turbulence are a concern. See Chapter 1 of NDOR's *Drainage Design and Erosion Control Manual* for more information on energy dissipation.

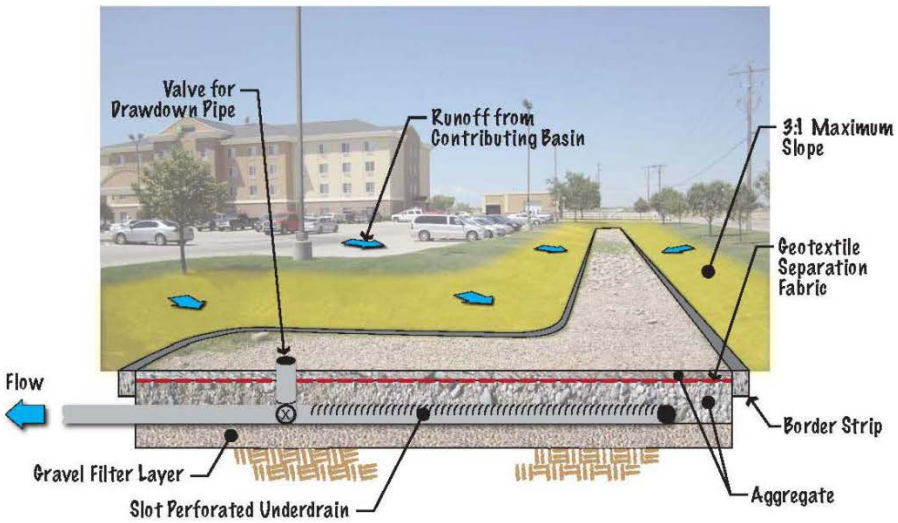

Infiltration Trench Example
Not to Scale

Infiltration Trench

DESIGN CONSIDERATIONS

Site characteristics are very important when designing infiltration trenches and should be taken into consideration early in the design process.

Infiltration trenches are built with a level bottom and should be used only where the topography of the site allows for this. Check the available right-of-way when determining the footprint.

Questions to ask yourself…

- Q. Does site topography allow for the placement of a level infiltration trench?
- Q. What impact will infiltration have on adjacent pavement, buildings, water bodies, groundwater, etc.?
- Q. What types of soils are on site and are they compacted?
- Q. How does the proposed infiltration trench interact with other design storm considerations?
- Q. What type of pretreatment is appropriate?

Infiltration trenches are susceptible to leaching pollutants into sensitive ground waters or saturating soils adjacent to infrastructure. The designer should reference design criteria for required setback distances.

The bottom of the infiltration trench is level and should be at least 4 feet above the seasonal high groundwater table, bedrock or other barrier layer.

A minimum infiltration rate of 0.50 inches/hour is required. In general, Hydrologic Soil Groups A and B meet the necessary infiltration rate; however, the soil should be tested for infiltration before finalizing the design to verify the assumed infiltration rate. Underlying soils with an infiltration rate greater than 12 inches/hour should not be used because of the higher potential for groundwater contamination.

Infiltration rates should be determined based on procedures outlined in the Nebraska Department of Environmental Quality Title 124 – Chapter 6 for soil percolation. Test holes should extend to a depth approximately 6 inches below the bottom of the proposed infiltration trench. Laboratory testing for permeability is also acceptable.

Where infiltration rates greater than 0.50 inches/hour cannot be achieved, an underdrain system may be used. The underdrain system should be designed for a 48-hour drawdown time and include a valve to help control discharge rates if needed. Cleanouts should also be provided.

Stabilize all basin outfalls that discharge into the infiltration trench to prevent scour and erosion. When used in an offline configuration, the Water Quality Volume is diverted to the infiltration trench. Stormwater flows greater than WQV should bypass the Treatment BMP.

The following Design Criteria table provides pretreatment criteria that should be followed to the extent practical. The designer should refer to the design guideline specific to the selected pretreatment BMP for additional information on function and design considerations.

Infiltration Trench

DESIGN CRITERIA

Description	Value
Maximum Contributing Basin Area	5 acres
Width	3 – 20 feet
Depth	3 – 8 feet (Depth ≤ Width)
Minimum Infiltration Rate	0.5 inch/hour
Maximum Infiltration Rate	12 inches/hour
Water Quality Volume (WQV)	Reference Chapter 3 of NDOR's *Drainage Design and Erosion Control Manual*
Aggregate Porosity	0.30 (Geotechnical engineer will need to approve anything greater than 0.30)
Time for Infiltration	48 hours (72 hours maximum)
Pretreatment Criteria	Grass Swale Length – 10 feet (minimum) Vegetated Filter Strip Length – 10 feet (minimum) Forebays – 10% of WQV (minimum)
Setback Distances	Surface Water – 50 feet Private Drinking Water Wells – 100 feet Public Drinking Water Supply Wells (Non-Community System) – 100 feet Public Drinking Water Supply Wells (Community System) – 500 feet Water Lines (Pressure) – 25 feet Water Lines (Suction) – 100 feet Property Lines – 5 feet Foundations (NDOR)* – 20 feet (assumes no basement) Foundations (Neighbors)* – 30 feet (assumes no basement)

* Add 10 feet to setback distance when foundations are lower in elevation than water quality feature or adjacent to a full depth basement.

DESIGN PROCEDURE

Step 1: Calculate Water Quality Volume (WQV)

Calculate WQV as defined in Chapter 3 of NDOR's *Drainage Design and Erosion Control Manual* **OR** use Exhibit 3.5 - Water Quality Volumes and Peak Discharges for Selected Acreages for sites under 5 acres.

Step 2: Size the infiltration trench volume, V_T

To determine the minimum volume of the infiltration trench, divide the WQV by the available pore space:

$$V_T = WQV/n$$

V_T = infiltration trench volume (ft^3)

n = aggregate porosity
(assume 0.30 or obtain from project geotechnical report)

Step 3: Calculate minimum bottom surface area

The minimum bottom surface area depends on the infiltration rate of the soil and drain time allowed.

$$A_{min} = \frac{WQV * (12\ in/ft)}{I * t}$$

A_{min} = minimum bottom surface area (ft^2)

I = infiltration rate of underlying soil (in/hr)
(obtain from field or laboratory testing)

t = time to drain, hrs (design for 48 hours)

Step 4: Calculate trench depth

Calculate the trench depth by dividing the trench volume by the bottom surface area.

$$D = \frac{V_T}{A}$$

D = depth of trench (ft)

Step 5: Check depth and revise area if needed

Check depth calculated against depth criteria provided in the Design Criteria table and revise area if needed.

- If $D \leq D_{min}$ use D_{min} and A_{min} for design ($A_{min} = A$)
- If $D > D_{min}$ select a depth between D and D_{max} and revise A_{min}

$$A = \frac{V_T}{D}$$

A = design area (ft^2)

Step 6: Determine trench area dimensions and check other Design Criteria

Designer needs to determine trench area dimensions using width criteria provided in the Design Criteria table and verify that $W \geq D$.

Step 7: Check diversion or storage and routing of larger storm events

Reference Chapter 1 of NDOR's *Drainage Design and Erosion Control Manual* to check the routing of larger design storm events. Design offline infiltration trenches to divert runoff greater than the Water Quality Volume Discharge Rate (Q_{WQ}) away from the system. Design online infiltration trenches for flow through and integrate any additional storage into the feature.

Infiltration Trench

DESIGN EXAMPLES

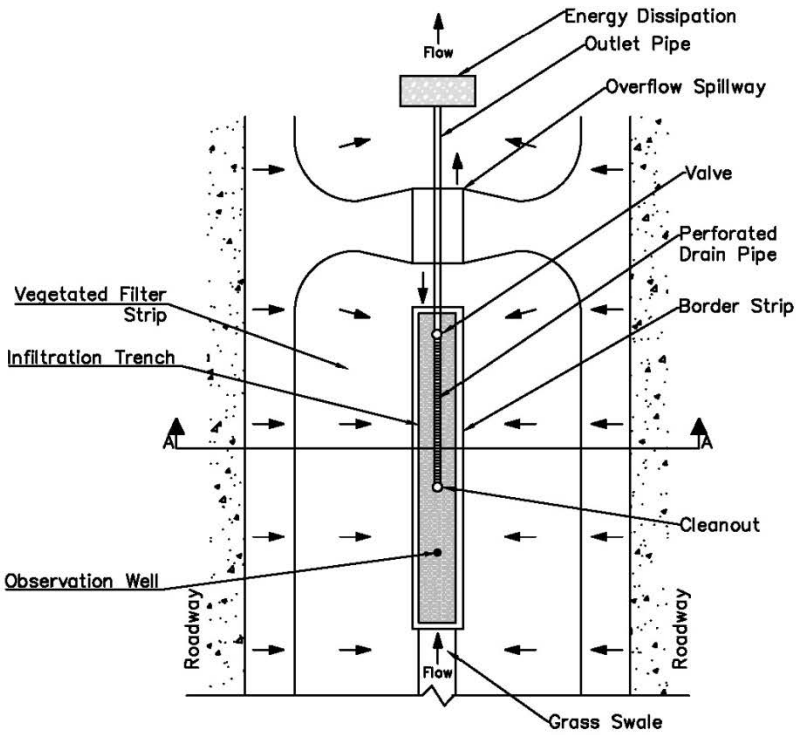

Infiltration Trench
(In Median)
Plan View

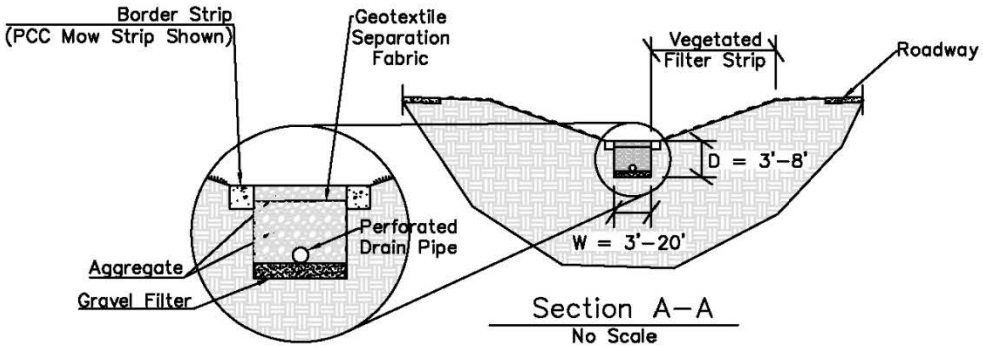

Section A–A
No Scale

Trench Section
No Scale

Infiltration Trench

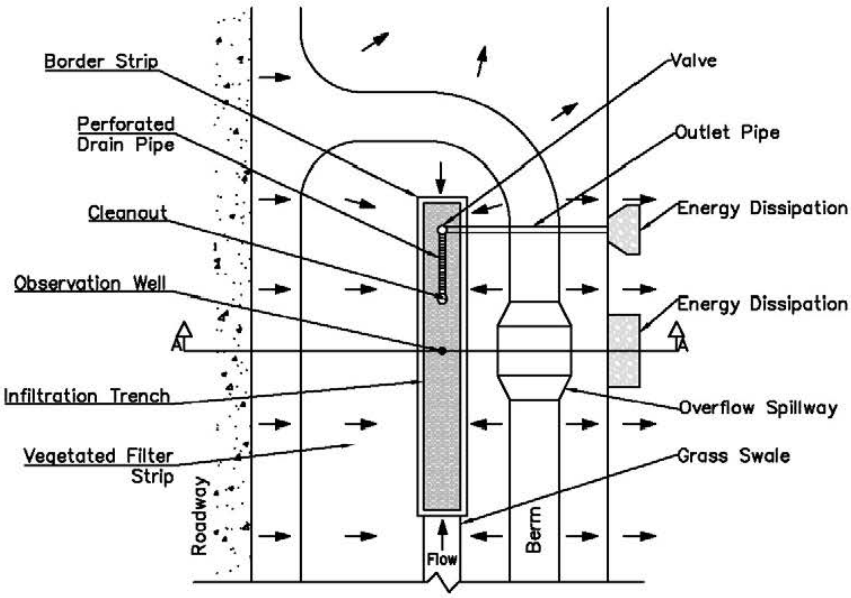

Infiltration Trench
(Off Foreslope)
Plan View

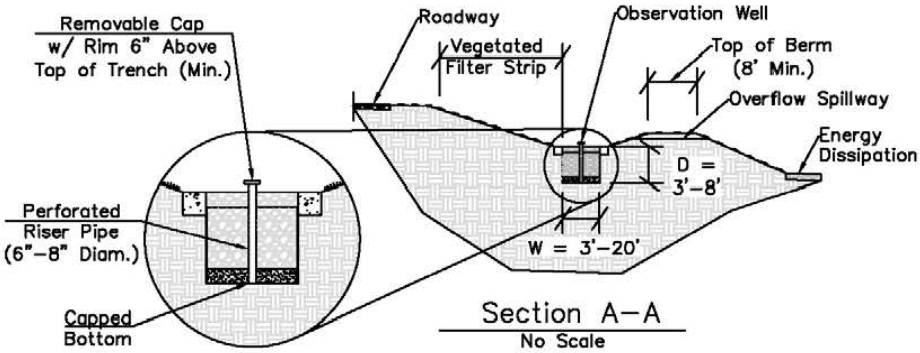

Section A–A
No Scale

Observation Well
No Scale

Infiltration Trench

CONSTRUCTION CONSIDERATIONS

- Consider in advance the construction sequencing and erosion and sediment control practices during site construction because infiltration trenches are prone to failure when inundated with a high sediment load.
- Stabilize upgradient contributing drainage area before putting infiltration trenches into operation.
- If it is not possible to stabilize upgradient before beginning construction and flow cannot be temporarily bypassed, provide erosion and sediment control protection for the infiltration trench.
- Because inlet protection is often not adequate during construction of an infiltration trench, the best protection is to bypass stormwater away from the facility until vegetation is established and all construction-related sediment has been controlled. Otherwise, the infiltration trench may be unusable immediately after implementation.
- Consider the space needed for pretreatment and any swale required for bypassed flow.
- If the infiltration area is being used as a sediment basin during construction, the bottom elevation of the sediment basin should be a minimum of 2 feet above the future infiltration bed invert elevation so that the trench can be excavated into native soils.
- Protect infiltration areas from construction or other traffic during the course of construction where practical. If this is not possible, take steps to reduce compaction of underlying soils.
- Excavate the bottom and sides of the trench in such a manner as to leave the soil in a natural, unsmeared, and uncompacted condition.
- Avoid using heavy equipment in the basin bottom during construction of the infiltration trench to maintain the infiltration rate.
- If infiltration areas do get compacted during construction, additional infiltration testing may be required.
- Consider trench stability and safety during construction. Refer to the Occupational Safety and Health Administration trench safety standards.

Infiltration Trench

MAINTENANCE AND INSPECTION REQUIREMENTS

The maintenance objectives for infiltration trench systems include providing litter control, maintaining storage capacity within the aggregate, and maintaining infiltration rates of the aggregate and subsoils. Diversion structures, outlets, and forebays should also be inspected and maintained, along with any pretreatment stormwater BMPs.

Frequency	Inspection and Maintenance Activity
After Construction (While NPDES Permit is Open)	• Inspect infiltration trench bi-weekly and after any major rainfall event (≥ ½ inch) for any surface ponding or indicators that water has ponded for an extended period of time. • Check observation wells 3 days (72 hours) after a major rainfall event (≥ ½ inch) to ensure proper drain time. • Inspect infiltration trench system bi-weekly for sediment buildup on the trench surface and any diversion structures, outlets, and forebays. Remove sediment as needed. • Remove trash and debris from the trench and any diversion structures, outlets, and forebays. • Inspect and maintain pretreatment stormwater BMPs in accordance with their respective design guidelines.
Quarterly (Through First Two Years From End of Construction)	• Inspect infiltration trench for any surface ponding or indicators that water has ponded for an extended period of time. • Check observation wells 3 days (72 hours) after a major rainfall event (≥ ½ inch) to ensure proper drain time. • Inspect infiltration trench for sediment buildup on the trench surface. Remove sediment as needed. • Inspect the trench and any diversion structures, outlets, and forebays for trash and debris, erosion, sediment buildup, and structural damage. Repair as needed. Inspect and maintain pretreatment stormwater BMPs in accordance with their respective design guidelines.

Infiltration Trench

Frequency	Inspection and Maintenance Activity
Annually (After First Two Years From End of Construction)	• Inspect infiltration trench for any surface ponding or indicators that water has ponded for an extended period of time. • Check observation wells 3 days (72 hours) after a major rainfall event (≥ ½ inch) to ensure proper drain time. • Inspect infiltration trench for sediment buildup on the trench surface. Remove sediment as needed. • Inspect the trench and any diversion structures, outlets, and forebays for trash and debris, erosion, sediment buildup, and structural damage. Repair as needed. • Inspect and maintain pretreatment stormwater BMPs in accordance with their respective design guidelines.
At Failure	• Analyze, redesign, and reconstruct.

RESOURCES AND REFERENCES

Arizona Department of Transportation, *ADOT Post-Construction Best Management Practices Manual*. July 2009.

Atlanta Regional Commission. *Georgia Stormwater Management Manual – Volume 2: Technical Handbook*. August 2001.

California Department of Transportation. *BMP Retrofit Pilot Program – Final Report*. January 2004.

California Department of Transportation. *Storm Water Quality Handbook – Project Planning and Design Guide*. July 2010.

Iowa State University – Institute for Transportation. *Iowa Stormwater Management Manual*. October 2009.

The Low Impact Development Center, Inc.

Minnesota Pollution Control Agency. *Protecting Water Quality in Urban Areas - Best Management Practices for Dealing with Storm Water Runoff from Urban, Suburban and Developing Areas of Minnesota*. March 2000.

Nebraska Department of Environmental Quality. *Title 124 - Rules and Regulations for the Design, Operation and Maintenance of Onsite Wastewater Treatment Systems*. December 2007.

Nebraska Department of Roads. *Drainage Design and Erosion Control Manual*. August 2006.

State of New Jersey. *New Jersey Stormwater Best Management Practice Manual*. March 2003.

StormwaterPA. *Pennsylvania Stormwater Best Management Practices Manual*. December 2006.

United States Environmental Protection Agency. *National Pollutant Discharge Elimination System (NPDES) Menu of BMPs*. Last Updated January 2008.

United States Environmental Protection Agency. *Storm Water Technology Fact Sheet - Infiltration Trench*. September 1999.

Upper White River Watershed Alliance. *Green Infrastructure Fact Sheets*. Downloaded February 2012.

Urban Drainage and Flood Control District. *Urban Storm Drainage Criteria Manual Volume 3*. 2010.

Infiltration Basin

OVERVIEW

Source: Colorado Department of Transportation (CDOT)

Definition

Infiltration basins capture runoff and allow it to infiltrate through native soils over a limited time period. The bottom of the basin is flat, and pollutants are removed through sedimentation, filtration, and adsorption to underlying soils. The bottom of the basin is vegetated and delineated with a border strip.

Benefits

- Flexible system that can provide detention as well as water quality benefits
- Effective in removing most pollutants.
- Provides for groundwater recharge.
- Can be shaped to meet right-of-way restrictions.

Overview Table

Associated Costs	L	M	H
Design		X	
Construction		X	X
Maintenance		X	
Pollutant Removal	**L**	**M**	**H**
Suspended Solids			X
Nutrients		X	X
Heavy Metals			X
Hydrocarbons			X

Limitations

- Infiltration basins are not suitable in areas of compacted fill or low permeability soils.
- Infiltration basins are not suitable in areas with a high groundwater table or groundwater contamination issues.
- Minimum setbacks must be met.
- Pretreatment is encouraged to help reduce the potential for clogging.
- Performance is reduced in cold weather.

Infiltration Basin

BEST MANAGEMENT PRACTICE (BMP) DESCRIPTION

Infiltration basins rely on infiltration through native soil to provide water quality treatment. They are designed to capture the Water Quality Volume (WQV) and infiltrate that volume in a 24-hour period (48 hours maximum). Infiltration basins can be designed offline or online and can be modified to include additional storage for peak flow reduction. They can accept flow from an outfall as a point discharge or as sheet flow from adjacent runoff. Pretreatment reduces the potential for clogging and extends the life of the system.

BMP Components

Pretreatment BMP – A Pretreatment BMP is one of any number of Treatment BMPs (vegetated filter strips, grass swales, forebays, etc.) which provides a gross reduction in the amount of trash and sediment carried by stormwater before it enters the infiltration basin. Placement of a Pretreatment BMP upgradient of the infiltration basin will reduce the likelihood of its clogging and failure. Many factors dictate the types of pretreatment BMP suitable for the site, including available space, an offline or online system, soil characteristics, site topography and cost. See the Treatment BMP design guidelines of the various systems for additional information on how to design the pretreatment.

Soils – The types of soils on site will partially determine how much water will be infiltrated and whether this BMP is a suitable option. Infiltration basins, as defined herein, rely on filtration through native soils. Refer to the project geotechnical report and the United States Department of Agriculture (USDA) Natural Resources Conservation Service (NRCS) Soil Survey for the project area to help determine project soil characteristics for design.

Berm – A berm is an earthen ridge used to contain, block and/or divert stormwater flows. Berms are frequently used in stormwater management design to contain and/or direct water quality flows into Treatment BMPs.

Length-Width Dimensions – Length and width dimensions define the area of the bottom of the infiltration basin which depends on the soil properties and volume of runoff. The shape is dictated by the available space; however, a length:width ratio of 2:1 is generally desirable with the length measured from the primary inflow point to the location of the drawdown structure. Length is defined as the longer axis in an x-y plane. Width is defined as the shorter axis in an x-y plane.

Water Quality Volume Depth, D_{WQ} – The depth of storage in the infiltration basin based on the Water Quality Volume (WQV) as defined in Chapter 3 of the Nebraska Department of Roads (NDOR) *Drainage Design and Erosion Control Manual*. It depends on the maximum soil infiltration rate and the volume of storage needed.

Total Depth – The depth of water stored in the infiltration basin. For a basin that is placed online, this depth includes the capacity to handle peak runoff for the design storm event and any additional storage for peak flow reduction.

Drawdown Pipe – Where grades allow, the designer should include a drawdown pipe that would allow any standing water in the infiltration basin to be drawn down in the event the basin does not drain and as needed for repairs. The drawdown pipe would include a section of slot

Infiltration Basin

perforated drain pipe lying horizontally below the bottom of the basin that connects to an adjustable valve, any riser pipe needed to access the valve, and solid drain pipe that discharges to a sewer pipe or is daylighted. The valve will remain closed under normal operations. A cleanout should be provided on the upgradient end of the perforated pipe section. Drawdown pipes should be 4-inch diameter minimum. The length should be one half the length of the basin (10' minimum).

Overflow Spillway – An overflow spillway is a protected area along a berm designed to convey overflow storm events instead of allowing overtopping of the berm. Energy dissipation should be provided where velocities and turbulence are a concern.

Border Strip – A border strip is a Portland cement mow strip, rock border, or other marker that delineates the basin from the surrounding landscape.

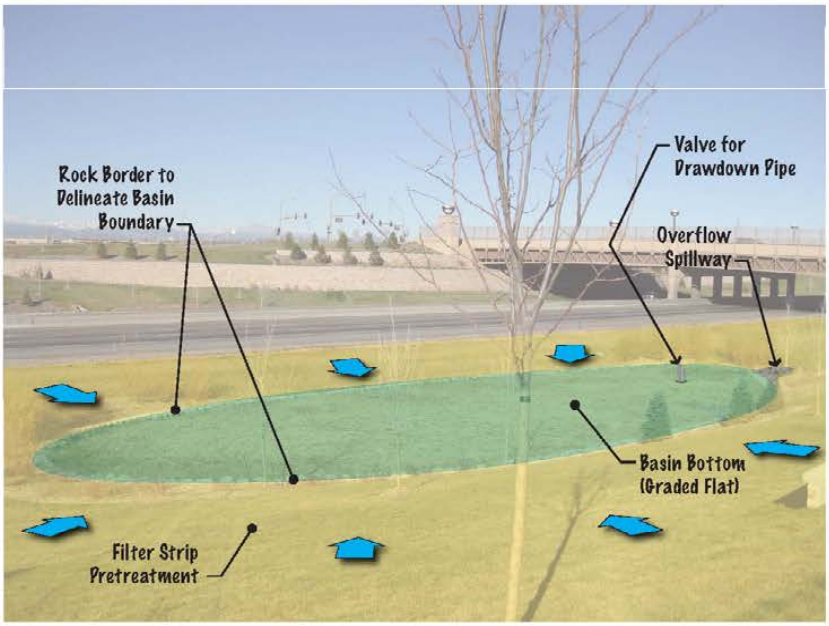

Infiltration Basin Example
Not to Scale

Infiltration Basin

DESIGN CONSIDERATIONS

Questions to ask yourself…

- Q. Does site topography allow for the placement of a level infiltration basin?
- Q. What impact will infiltration have on adjacent pavement, buildings, water bodies, groundwater, etc.?
- Q. What types of soils are on site and are they compacted?
- Q. How does the proposed infiltration basin section interact with other design storms?
- Q. What type of pretreatment is appropriate?

Infiltration basins often require a large flat area and should be used only where the topography of the site allows for this. Place infiltration basins outside lateral obstacle clearance zones since water is stored at depths up to 1 foot.

Infiltration basins are susceptible to leaching pollutants into sensitive waters or saturating soils adjacent to infrastructure. The designer should reference the design criteria for setback distances.

The bottom of the infiltration basin should be level and at least 4 feet above the seasonal high groundwater table, bedrock, or other barrier layer.

It is necessary for soils to have a minimum infiltration rate of 0.50 inches/hour for the basin to function. In general, Hydrologic Soil Groups A and B meet the necessary infiltration rate; however, the soil should be tested for infiltration before finalizing the design to verify the assumed infiltration rate. Soils with an infiltration rate greater than 12 inches/hour should not be used because of the higher potential for groundwater contamination.

Infiltration rates of native soil should be determined based on procedures outlined in the Nebraska Department of Environmental Quality's Title 124 – Chapter 6 for soil percolation. Test holes should extend to a depth approximately 6 inches below the bottom of the basin. Laboratory testing for permeability is also acceptable.

Infiltration basins may be modified to include additional storage for peak flow reduction as long as the Water Quality Volume (WQV) is provided below the lowest opening of any inlet structure.

Stabilize all basin outfalls that discharge into the infiltration basin to prevent scour and erosion. Stabilization at outfalls should also be designed to help distribute the flow uniformly across the basin.

The following Design Criteria table provides pretreatment criteria that should be followed to the extent practical. The designer should refer to the design guideline specific to the selected pretreatment BMP for additional information on function and design considerations.

Infiltration Basin

DESIGN CRITERIA

Description	Value
Maximum Contributing Basin Area	10 acres (online) 20 acres (offline)
Maximum WQV Depth, D_{WQ}	1 foot
Maximum Depth of Basin, D (Full Depth That Includes Detention Volume)	2 feet
Minimum Infiltration Rate	0.5 inch/hour
Maximum Infiltration Rate	12 inches/hour
Water Quality Volume (WQV)	Reference Chapter 3 of NDOR's *Drainage Design and Erosion Control Manual*
Time for Infiltration	24 hours (48 hours maximum)
Underdrain Length	10 feet minimum (50% of basin length typical)
Pretreatment Criteria	Grass Swale Length – 10 feet (minimum) Vegetated Filter Strip Length – 10 feet (minimum) Forebays – 10% of WQV (minimum)
Setback Distances	Surface Water – 50 feet Private Drinking Water Wells – 100 feet Public Drinking Water Supply Wells (Non-Community System) – 100 feet Public Drinking Water Supply Wells (Community System) – 500 feet Water Lines (Pressure) – 25 feet Water Lines (Suction) – 100 feet Property Lines – 5 feet Foundations (NDOR)* – 20 feet (assumes no basement) Foundations (Neighbors)* – 30 feet (assumes no basement)

* Add 10 feet to setback distance when foundations are lower in elevation than water quality feature or adjacent to a full depth basement.

DESIGN PROCEDURE

Step 1: Calculate Water Quality Volume (WQV)

Calculate the WQV as defined in Chapter 3 of NDOR's *Drainage Design and Erosion Control Manual* **OR** use Exhibit 3.5 - Water Quality Volumes and Peak Discharges for Selected Acreages for sites less than 5 acres if appropriate.

Step 2: Calculate bottom surface area

The minimum bottom surface area depends on the infiltration rate of the soil and drain time allowed.

Infiltration Basin

$$A_{min} = \frac{WQV * (12\ in/ft)}{I * t}$$

A_{min} = minimum bottom surface area, ft^2

I = infiltration rate of underlying soil (in/hr)
(obtain from field or laboratory testing)

t = time to drain, hrs (design for 24 hours)

Step 3: Calculate design area for a determined depth

For D = 1 foot, A_{min} = A

For D < 1 foot, use the following equation:

$$A = \frac{WQV}{D}$$

A = design area

Step 4: Check diversion or storage and routing of larger storm events

Reference Chapter 1 of NDOR's *Drainage Design and Erosion Control Manual* to check the routing of larger design storm events. Design offline infiltration basins to divert runoff greater than the Water Quality Volume Discharge Rate (Q_{WQ}) away from the system. Design online infiltration basins for flow through and integrate any additional storage into the feature. Additional storage to reduce peak runoff will be added above the WQV.

Infiltration Basin

DESIGN EXAMPLES

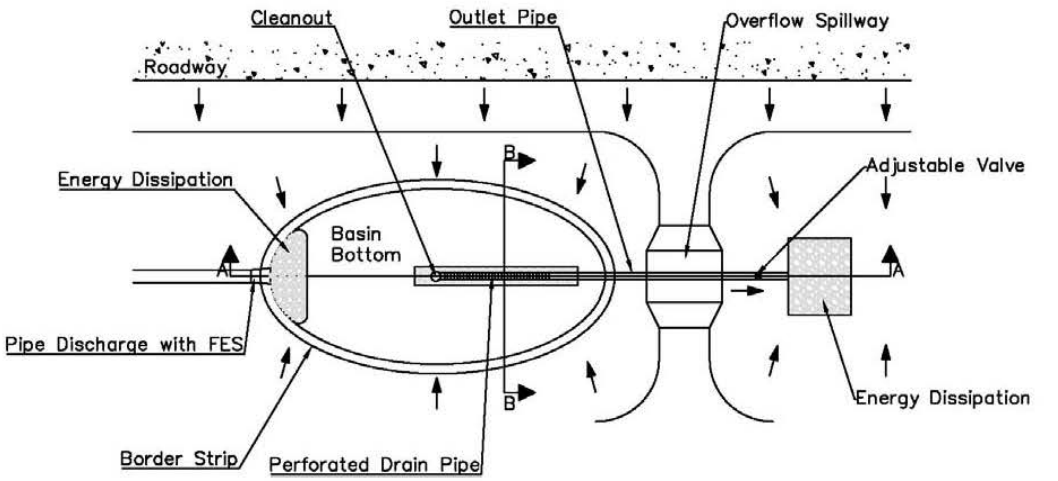

Infiltration Basin
No Scale

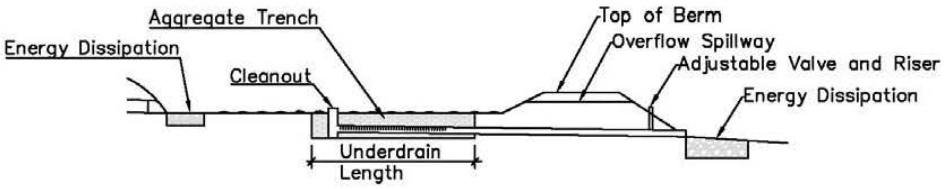

Section A–A
No Scale

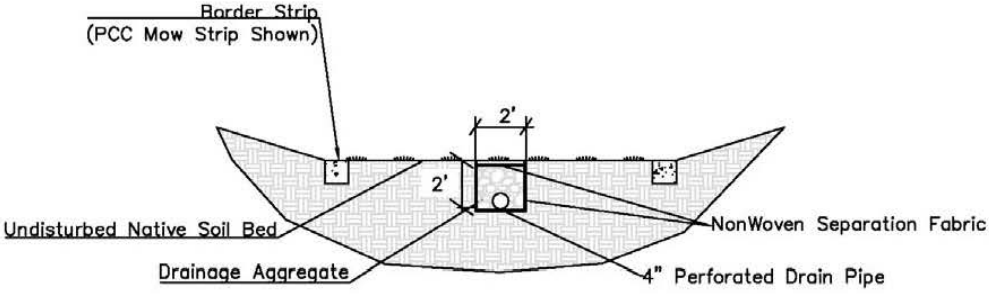

Section B–B
No Scale

Infiltration Basin

CONSTRUCTION CONSIDERATIONS

- Consider in advance the construction sequencing and erosion and sediment control practices during site construction because infiltration basins are prone to failure when inundated with a high sediment load.
- Stabilize the upgradient contributing drainage area before putting infiltration basins into operation.
- Because inlet protection is often not adequate during construction of an infiltration basin, the best protection is to bypass stormwater away from the facility until vegetation is established and all construction-related sediment has been controlled. Otherwise, the infiltration basin may be unusable immediately after implementation.
- Consider the space needed for pretreatment and any swale required for bypassed flow.
- If upgradient stabilization is not possible before beginning construction and flow cannot be temporarily bypassed, provide erosion and sediment control protection for the infiltration basin.
- If the infiltration area is being used as a sediment basin during construction, the bottom elevation of the sediment basin should be a minimum of 2 feet above the future infiltration bed invert elevation so that the trench can be excavated in native soils
- Protect infiltration areas from construction or other traffic during the course of construction. If this is not possible, take steps to reduce compaction of underlying soils.
- Excavate the bottom of the infiltration basin in such a manner as to leave the soil in a natural, unsmeared, and uncompacted condition.
- If infiltration areas do get compacted during construction, additional infiltration testing may be required.

Infiltration Basin

MAINTENANCE AND INSPECTION REQUIREMENTS

The maintenance objectives for infiltration basin systems include providing litter control, monitoring sedimentation and erosion, and maintaining infiltration rates of the soil. Diversion structures, outlets, and forebays should also be inspected and maintained, along with any pretreatment stormwater BMPs.

Frequency	Inspection and Maintenance Activity
After Construction (While NPDES Permit is Open)	• Inspect infiltration basin bi-weekly and after any major rainfall event (≥ ½ inch) for any surface ponding or indicators that water has ponded for an extended period of time. • Check infiltration basin 3 days (72 hours) after a major rainfall event (≥ ½ inch) to ensure proper drain time. • Inspect infiltration basin bi-weekly to ensure the intended vegetation is establishing well. Consider reseeding if needed. • Inspect infiltration basin bi-weekly for erosion and any damage by equipment or vehicles after every major rainfall event (≥ ½ inch). Repair as needed. • Inspect infiltration basin system bi-weekly for sediment buildup on the bottom of the basin and at any diversion structures, outlets, and forebays. Remove sediment as needed. • Remove trash and debris bi-weekly from the basin and any diversion structures, outlets, and forebays. • Inspect and maintain pretreatment stormwater BMPs in accordance with their respective design guidelines.

Quarterly (Through First Two Years From End of Construction)	• Inspect infiltration basin for any surface ponding or indicators that water has ponded for an extended period of time.
	• Check infiltration basin 3 days (72 hours) after a major rainfall event (≥ ½ inch) to ensure proper drain time.
	• Inspect infiltration basin to ensure there is a dense, uniform stand of the intended vegetation. Consider reseeding if needed.
	• Mow grass to control weeds.
	  ○ Mow grass to a height not less than 6 inches.
	  ○ Do not let the weeds get over the 12-inch maximum height before mowing.
	• Inspect infiltration basin for erosion and damage by equipment or vehicles. Repair as needed.
	• Inspect infiltration basin for sediment buildup on the bottom of the basin. Remove sediment as needed.

Infiltration Basin

Frequency	Inspection and Maintenance Activity
	• Inspect the basin and any diversion structures, outlets, and forebays for trash and debris, erosion, sediment buildup, and structural damage. Repair as needed. • Inspect and maintain pretreatment stormwater BMPs in accordance with their respective design guidelines.

Annually (After First Two Years From End of Construction)	• Inspect infiltration basin for any surface ponding or indicators that water has ponded for an extended period of time.
	• Check infiltration basin 3 days (72 hours) after a major rainfall event (≥ ½ inch) to ensure proper drain time.
	• Inspect infiltration basin to ensure there is a dense, uniform stand of the intended vegetation. Consider reseeding if needed.
	• Mow grass to control weeds.
	  ○ Mow grass to a height not less than 6 inches.
	  ○ Do not let the weeds get over the 12-inch maximum height before mowing.
	• Inspect infiltration basin for erosion and damage by equipment or vehicles. Repair as needed.
	• Inspect infiltration basin for sediment buildup on the bottom of the basin. Remove sediment as needed.
	• Inspect the basin and any diversion structures, outlets, and forebays for trash and debris, erosion, sediment buildup, and structural damage. Repair as needed. Inspect and maintain pretreatment stormwater BMPs in accordance with their respective design guidelines.

At Failure	• Analyze, redesign, and reconstruct. • Consider deep aeration of soils and/or tilling before any major redesign or reconstruction.

RESOURCES AND REFERENCES

Arizona Department of Transportation, *ADOT Post-Construction Best Management Practices Manual*. July 2009.

Atlanta Regional Commission. *Georgia Stormwater Management Manual – Volume 2: Technical Handbook*. August 2001.

California Department of Transportation. *BMP Retrofit Pilot Program – Final Report*. January 2004.

California Department of Transportation. *Storm Water Quality Handbook – Project Planning and Design Guide*. July 2010.

Iowa State University – Institute for Transportation. *Iowa Stormwater Management Manual*. October 2009.

The Low Impact Development Center, Inc.

Minnesota Pollution Control Agency. *Protecting Water Quality in Urban Areas - Best Management Practices for Dealing with Storm Water Runoff from Urban, Suburban and Developing Areas of Minnesota*. March 2000.

Nebraska Department of Environmental Quality. *Title 124 - Rules and Regulations for the Design, Operation and Maintenance of Onsite Wastewater Treatment Systems*. December 2007.

Nebraska Department of Roads. *Drainage Design and Erosion Control Manual*. August 2006.

State of New Jersey. *New Jersey Stormwater Best Management Practice Manual*. March 2003.

StormwaterPA. *Pennsylvania Stormwater Best Management Practices Manual*. December 2006.

United States Environmental Protection Agency. *National Pollutant Discharge Elimination System (NPDES) Menu of BMPs*. Last Updated January 2008.

United States Environmental Protection Agency. *Storm Water Technology Fact Sheet - Infiltration Trench*. September 1999.

Upper White River Watershed Alliance. *Green Infrastructure Fact Sheets*. Downloaded February 2012.

Urban Drainage and Flood Control District. *Urban Storm Drainage Criteria Manual Volume 3*. 2010.

Bioretention

OVERVIEW

Source: Delaware Department of Transportation (DelDOT)

Definition

Bioretention systems temporarily store runoff in a shallow vegetated basin and infiltrate stormwater over a limited time period through underlying soils. An infiltration cell, consisting of a sand and compost layer with an underdrain, is part of this design. The infiltration cell helps provide water quality treatment in low permeability soils.

Benefits

- Suitable for low permeability soils when constructed with an infiltration cell and underdrain.
- Flexible system that can provide detention as well as water quality benefits
- Can be shaped to meet right-of-way restrictions.
- Can beautify a site with landscaped feature.

Overview Table

Associated Costs	L	M	H
Design		X	
Construction		X	
Maintenance		X	
Pollutant Removal	**L**	**M**	**H**
Suspended Solids			X
Nutrients		X	
Heavy Metals		X	X
Hydrocarbons		X	

Limitations

- Bioretention systems are not typically suitable in areas with a high groundwater table or groundwater contamination issues.
- Minimum setbacks must be met.
- Pretreatment is encouraged to help reduce the potential for clogging.
- Concentrated flows should include energy dissipation.

Bioretention

BEST MANAGEMENT PRACTICE (BMP) DESCRIPTION

Bioretention systems are a single basin or series of basins that capture and filter stormwater runoff through an infiltration cell and infiltrate it into surrounding soils. The infiltration cell consists of sand and compost filtration media and an underdrain. Surface soils within the basin are amended with compost. Bioretention systems are landscaped with non-invasive, preferably native, vegetation that is suitable for the dry and wet cycles of the basin. Shredded wood mulch is typically used for groundcover.

Bioretention basins are designed to capture the Water Quality Volume (WQV) and infiltrate that volume in a 24-hour period (48 hours maximum). Pretreatment reduces the potential for clogging and extends the life of the system.

Bioretention basins can be designed offline or online and can be modified to include storage to provide a reduction in peak runoff. Online bioretention basins should include an inlet structure to pass storm events that exceed the Water Quality event. Bioretention basins can accept flow from an outfall as a point discharge or as sheet flow from adjacent runoff; however, energy dissipation that spreads the flow out is needed for any point discharge.

BMP Components

Pretreatment BMP – A Pretreatment BMP is one of any number of Treatment BMPs (vegetated filter strips, grass swales, forebays, etc.) which provides a gross reduction in the amount of trash and sediment carried by stormwater before it enters the bioretention basin. Placement of a Pretreatment BMP upgradient of the bioretention basin will reduce the likelihood of its clogging and failure. Many factors dictate the types of pretreatment BMP suitable for the site, including available space, an offline or online system, soil characteristics, site topography and cost. See the Treatment BMP design guidelines of the various systems for additional information on how to design the pretreatment.

Soils – The types of soils on site will partially determine how much water will be infiltrated in underlying soils. Refer to the project geotechnical report and the United States Department of Agriculture (USDA) Natural Resources Conservation Service (NRCS) Soil Survey for the project area to help determine project soil characteristics for design.

Infiltration Cell – The infiltration cell is an excavated section of the lower part of the bioretention basin which is backfilled with a filtration media. The filtration media usually includes a mix of fine sand and organic compost. An underdrain system is placed at the bottom of the infiltration cell. For aggregate gradations with a maximum size equal to or greater than ½ inch, a non-woven filter fabric is also needed along the sides of the trench and a free-draining sand-gravel layer or non-woven filter fabric on the bottom to reduce the potential for migration of fines into the free-draining aggregate. The bottom of the trench should be level.

Berm – A berm is an earthen ridge used to contain, block and/or divert stormwater flows. Berms are frequently used in stormwater management design to contain and/or direct water quality flows into Treatment BMPs.

Length-Width Dimensions – Length and width dimensions define the area of the bottom of the bioretention basin which depends on the volume of runoff. The shape is dictated by the available space; however, a length:width ratio of 2:1 is generally desirable with the length

measured from the primary inflow point to the location of the drawdown structure. Length is defined as the longer axis in an x-y plane. Width is defined as the shorter axis in an x-y plane.

Water Quality Volume Depth, D_{WQ} – The depth of water stored in the bioretention basin is based on the Water Quality Volume (WQV) as defined in Chapter 3 of the Nebraska Department of Roads (NDOR) *Drainage Design and Erosion Control Manual*. It generally depends on soil properties and the volume of storage needed.

Total Depth – The depth of water stored in the bioretention basin. For a basin that is placed online, this depth includes the capacity to handle peak runoff for the design storm event and any additional storage for peak flow reduction.

Underdrain – The designer should include an underdrain positioned at the bottom of the infiltration cell that would allow for water to drain out of the basin. The underdrain pipe would include a section of slot perforated drain pipe lying horizontally at the bottom of the chamber surrounded by a 6-inch layer of 1 ½-inch drainage aggregate. The slot perforated drain pipe should connect to an adjustable valve, any riser pipe needed to access the valve, and solid drain pipe that discharges to a sewer pipe or is daylighted. A cleanout should be provided on the upgradient end of the perforated pipe section. Underdrain pipes should be 4-inch diameter minimum.

Inlet Structure – An inlet structure is a feature within the Treatment BMP which is designed to convey the peak runoff that exceeds the Water Quality event before negative impacts to the Treatment BMP occurs. Flows up through the 100 year storm event may need to be considered. Energy dissipation should be provided where velocities and turbulence are a concern.

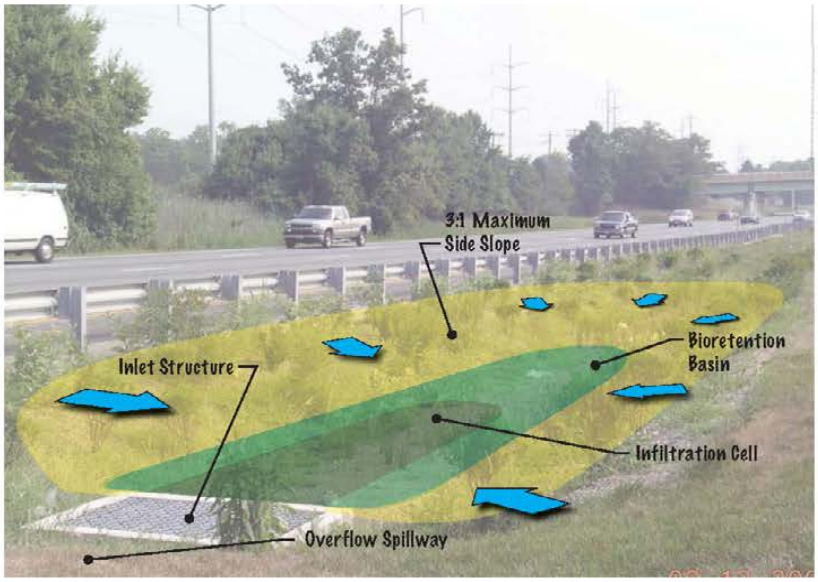

Bioretention Example
Not to Scale

Bioretention

DESIGN CONSIDERATIONS

Site characteristics are very important when designing bioretention systems and should be taken into consideration early in the design process.

Bioretention basins are built with a level bottom and should be used only where the topography of the site allows for this.

Multiple stepped basins may be needed on a sloped area to provide the necessary volume of treatment. Check site slopes and available right-of-way when determining the footprint.

Questions to ask yourself…

- Q. Does site topography allow for the placement of a level infiltration basin?
- Q. What types of soils are on site and are they compacted?
- Q. What impact will infiltration have on adjacent pavement, buildings, water bodies, groundwater, etc.?
- Q. Is a reliable source of organic compost readily available?
- Q. What type of pretreatment is appropriate?

The bottom of the bioretention basin should be level and at least 4 feet above the seasonal high groundwater table, bedrock or other barrier layer.

If the infiltration rate of underlying site soils is greater than 1.0 inch/hour, consider designing an infiltration basin instead of a bioretention basin.

Bioretention basins are susceptible to leaching pollutants into sensitive waters or saturating soils adjacent to infrastructure. The designer should reference design criteria for setback distances.

Organic compost used in the filtration media should be tested and approved for use in a planting bed. Check local availability of suitable organic compost.

Wood mulch, if used in the bioretention basin around plantings, should be triple shredded hardwood mulch that interlocks better and is less susceptible to floating. A suitable depth is usually 3 inches.

The upper 6 inches of soil outside the infiltration cell should be amended to improve soils for planting. NDOR staff will provide guidance on any amendments.

Stabilize all basin outfalls that discharge into the bioretention basin to prevent scour and erosion. Stabilization at outfalls should also be designed to help distribute the flow uniformly across the basin.

The following Design Criteria table provides pretreatment criteria that should be followed to the extent practical. The designer should refer to the design guideline specific to the selected pretreatment BMP for additional information on function and design considerations.

Bioretention

DESIGN CRITERIA

Description	Value
Maximum Contributing Basin Area	5 acres
Maximum WQV Depth, D_{WQ}	1 foot
Maximum Depth of Basin, D (Full Depth That Includes Detention Volume)	2 feet
Infiltration Cell Depth, D_F	2 feet (minimum) 3 feet (maximum) (Depth ≤ Width)
Infiltration Cell Coefficient of Permeability, k	0.25 feet/hour typical (Based on sand-compost mix design)
Time for Infiltration	24 hours (48 hours maximum)
Typical Underdrain Pipe Separation	10 feet
Water Quality Volume (WQV)	Reference Chapter 3 of NDOR's *Drainage Design and Erosion Control Manual*
Pretreatment Criteria	Grass Swale Length – 10 feet (minimum) Vegetated Filter Strip Length – 10 feet (minimum) Forebays – 10% of WQV (minimum)
Setback Distances	Surface Water – 50 feet Private Drinking Water Wells – 100 feet Public Drinking Water Supply Wells (Non-Community System) – 100 feet Public Drinking Water Supply Wells (Community System) – 500 feet Water Lines (Pressure) – 25 feet Water Lines (Suction) – 100 feet Property Lines – 5 feet Foundations (NDOR)* – 20 feet (assumes no basement) Foundations (Neighbors)* – 30 feet (assumes no basement)

* Add 10 feet to setback distance when foundations are lower in elevation than water quality feature or adjacent to a full depth basement.

DESIGN PROCEDURE

Step 1: Calculate Water Quality Volume (WQV)

Calculate the WQV as defined in Chapter 3 of NDOR's *Drainage Design and Erosion Control Manual* **OR** use Exhibit 3.5 – Water Quality Volumes and Peak Discharges for Selected Acreages for sites under 5 acres.

Bioretention

Step 2: Size the infiltration cell surface area, A_F

The minimum surface area of the infiltration cell is based on Darcy's law:

$$A_F = \frac{WQV*D_F}{k*t*(D_F+0.5D_{WQ})}$$

A_F = infiltration cell surface area (ft^2)

D_F = depth of infiltration cell (ft)

D_{WQ} = height of WQV above the filter bed (ft)

k = coefficient of permeability (ft/hr)
(assume 0.25 ft/hr for infiltration cell)

t = bioretention basin drain time, hrs (design for 24 hours)

Step 3: Determine the length and width of the infiltration cell using the calculated minimum surface area and check that the width is not less than the depth.

$$L = A_F/W_F$$

W_F = width of the infiltration cell

L = length of the infiltration cell

Verify that $W \geq D$

Step 4: Check Underdrain Spacing.

Verify that underdrains are spaced evenly 10 feet apart per Design Criteria

Step 5: Calculate the area of the basin.

$$A = \frac{WQV}{D_{WQ}}$$

A = design area (ft^2)

Step 6: Check diversion or storage and routing of larger storm events

Reference Chapter 1 of NDOR's *Drainage Design and Erosion Control Manual* to check the routing of larger design storm events. Design offline bioretention basins to divert runoff greater than the Water Quality Volume Discharge Rate (Q_{WQ}) away from the system. Design online bioretention basins for flow through and integrate any additional storage into the feature. Additional storage to reduce peak runoff will be added above the WQV.

Bioretention

DESIGN EXAMPLES

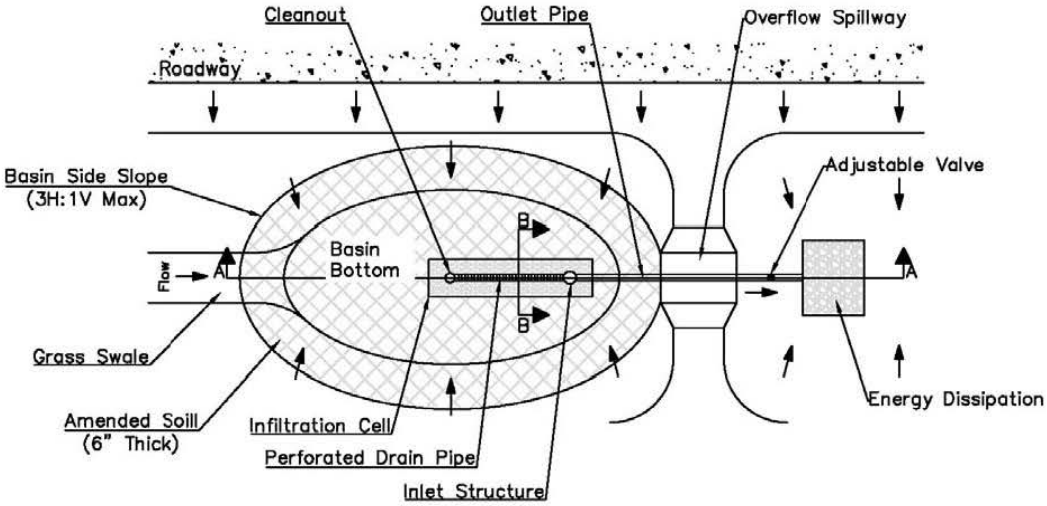

Bioretention Basin
No Scale

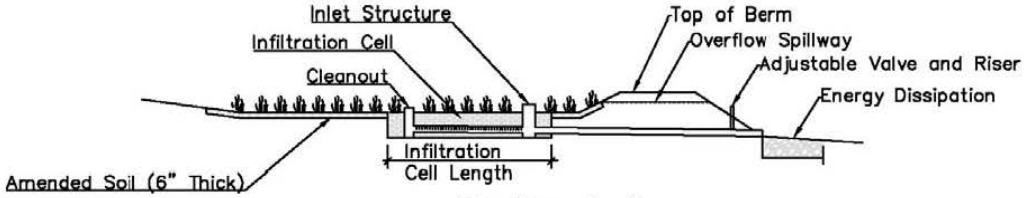

Section A–A
No Scale

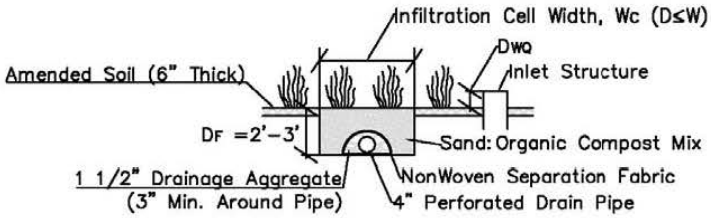

Section B–B
No Scale

Bioretention

CONSTRUCTION CONSIDERATIONS

- Consider in advance the construction sequencing and erosion and sediment control practices during site construction because bioretention basins are prone to failure when inundated with a high sediment load. Stabilize the upgradient contributing drainage area before putting bioretention basins into operation.
- Because inlet protection is often not adequate during construction of a bioretention basin, bypass stormwater away from the facility until vegetation is established and all construction-related sediment has been controlled for the best protection. Otherwise, the bioretention basin may be unusable immediately after implementation.
- Consider the space needed for pretreatment and any swale required for bypassed flow.
- If upgradient stabilization prior to construction is not possible and flow cannot be temporarily bypassed, provide erosion and sediment control protection for the infiltration basin.
- If the infiltration area is being used as a sediment basin during construction. the bottom elevation of the sediment basin should be a minimum of 2 feet above the future infiltration bed invert elevation so that the trench can be excavated in native soils.
- Protect infiltration areas from construction or other traffic during the course of construction. If this is not possible, take steps to reduce compaction of underlying soils.
- Excavate the bottom in such a manner as to leave the soil in a natural, unsmeared, and uncompacted condition.
- If infiltration areas do get compacted during construction, additional infiltration testing may be required.

MAINTENANCE AND INSPECTION REQUIREMENTS

The maintenance objectives for bioretention basins include providing litter control, monitoring sedimentation and erosion, and maintaining infiltration rates of the soil. Diversion structures, outlets, and forebays should also be inspected and maintained along with any pretreatment stormwater BMPs.

Frequency	Inspection and Maintenance Activity
After Construction (While NPDES Permit is Open)	• Inspect bioretention basin bi-weekly and after any major rainfall event (≥ ½ inch) for any surface ponding or indicators that water has ponded for an extended period of time. • Check bioretention basin 3 days (72 hours) after a major rainfall event (≥ ½ inch) to ensure proper drain time. • Inspect bioretention basin bi-weekly to ensure the intended vegetation is establishing well. Consider reseeding if needed. If a sand layer is used at the surface, remove any unwanted vegetation. • Inspect bioretention basin bi-weekly for erosion and any damage by equipment or vehicles after every major rainfall event (≥ ½ inch). Repair as needed. • Inspect bioretention basin system bi-weekly for sediment buildup on the bottom of the basin and at any diversion structures, outlets, and forebays. Remove sediment as needed. • Remove trash and debris bi-weekly from the basin and any diversion structures, outlets, and forebays. • Inspect and maintain pretreatment stormwater BMPs in accordance with their respective design guidelines.

Quarterly (Through First Two Years From End of Construction)	• Inspect bioretention basin for any surface ponding or indicators that water has ponded for an extended period of time.
	• Check bioretention basin 3 days (72 hours) after a major rainfall event (≥ ½ inch) to ensure proper drain time.
	• Inspect bioretention basin to ensure there is a dense, uniform stand of the intended vegetation. Consider reseeding if needed. If a sand layer is used at the surface remove any unwanted vegetation.
	• Mow grass to control weeds.
	  ○ Mow grass to a height not less than 6 inches.
	  ○ Do not let the weeds get over the 12-inch maximum height before mowing.
	  ○ Remove and properly dispose of cuttings from the infiltration basin.

Bioretention

Frequency	Inspection and Maintenance Activity
	• Inspect bioretention basin for erosion and damage by equipment or vehicles. Repair as needed. • Inspect bioretention basin for sediment buildup on the bottom of the basin. Remove sediment as needed. • Inspect the basin and any diversion structures, outlets, and forebays for trash and debris, erosion, sediment buildup, and structural damage. Repair as needed. • Inspect and maintain pretreatment stormwater BMPs in accordance with their respective design guidelines.

Annually (After First Two Years From End of Construction)	• Inspect bioretention basin for any surface ponding or indicators that water has ponded for an extended period of time.
	• Check bioretention basin 3 days (72 hours) after a major rainfall event (≥ ½ inch) to ensure proper drain time.
	• Inspect bioretention basin to ensure there is a dense, uniform stand of the intended vegetation. Consider reseeding if needed. If a sand layer is used at the surface, remove any unwanted vegetation.
	• Mow grass to control weeds.
	  ○ Mow grass to a height not less than 6 inches.
	  ○ Do not let the weeds get over the 12-inch maximum height before mowing.
	  ○ Remove and properly dispose of cuttings from the infiltration basin.
	• Inspect bioretention basin for erosion and damage by equipment or vehicles. Repair as needed.
	• Inspect bioretention basin for sediment buildup on the bottom of the basin. Remove sediment as needed.
	• Inspect the basin and any diversion structures, outlets, and forebays for trash and debris, erosion, sediment build-up, and structural damage. Repair as needed. Inspect and maintain pretreatment stormwater BMPs in accordance with their respective design guidelines.

At Failure	• Analyze, redesign, and reconstruct. • Consider deep aeration of soils and/or tilling before any major redesign or reconstruction.

RESOURCES AND REFERENCES

Arizona Department of Transportation, *ADOT Post-Construction Best Management Practices Manual*. July 2009.

Atlanta Regional Commission. *Georgia Stormwater Management Manual – Volume 2: Technical Handbook*. August 2001.

California Department of Transportation. *BMP Retrofit Pilot Program – Final Report*. January 2004.

California Department of Transportation. *Storm Water Quality Handbook – Project Planning and Design Guide*. July 2010.

Iowa State University – Institute for Transportation. *Iowa Stormwater Management Manual*. October 2009.

The Low Impact Development Center, Inc.

Minnesota Pollution Control Agency. *Protecting Water Quality in Urban Areas – Best Management Practices for Dealing with Storm Water Runoff from Urban, Suburban and Developing Areas of Minnesota*. March 2000.

Nebraska Department of Environmental Quality. *Title 124 - Rules and Regulations for the Design, Operation and Maintenance of Onsite Wastewater Treatment Systems*. December 2007.

Nebraska Department of Roads. *Drainage Design and Erosion Control Manual*. August 2006.

State of New Jersey. *New Jersey Stormwater Best Management Practice Manual*. March 2003.

StormwaterPA. *Pennsylvania Stormwater Best Management Practices Manual*. December 2006.

United States Environmental Protection Agency. *National Pollutant Discharge Elimination System (NPDES) Menu of BMPs*. Last Updated January 2008.

United States Environmental Protection Agency. *Storm Water Technology Fact Sheet – Infiltration Trench*. September 1999.

Upper White River Watershed Alliance. *Green Infrastructure Fact Sheets*. Downloaded February 2012.

Urban Drainage and Flood Control District. *Urban Storm Drainage Criteria Manual Volume 3*. 2010.

Media Filter

OVERVIEW

Source: Delaware Department of Transportation (DelDOT)

Definition

Media filters temporarily store runoff and filter it by gravity through a filter bed of sand or other filtration media. The filter bed is often confined within a concrete chamber and has underdrains that collect stormwater and discharge it away from the structure. A sediment chamber or sediment forebay provides pretreatment to the filter bed.

Benefits

- Suitable for highly urbanized areas and areas with direct runoff from impervious surface such as parking or drive lanes.
- Can fit in limited space and be located underground and under pavement.
- Suitable in areas where infiltration practices and groundwater contamination are a concern.

Overview Table

Associated Costs	L	M	H
Design			X
Construction			X
Maintenance			X
Pollutant Removal	**L**	**M**	**H**
Suspended Solids			X
Nutrients	X	X	
Heavy Metals		X	
Hydrocarbons		X	

Limitations

- Sand filters are appropriate for smaller drainage areas.
- Higher costs can be prohibitive.
- Pretreatment is encouraged to help reduce the potential for clogging.
- Media filters may create possible odor problems.
- Flotation of the structure should be considered in areas with a high groundwater table.

Media Filter

BEST MANAGEMENT PRACTICE (BMP) DESCRIPTION

Media filters rely on a filter bed made up of sand or other porous media to provide treatment. As described herein, the filter bed is confined within an underground concrete chamber, a "filtration chamber," and can be designed to accept flow from an outfall as a point discharge or as sheet flow from adjacent runoff. A surcharge zone above the filter bed is needed to allow head to develop and allow infiltration/filtration by gravity into an underdrain that discharges into a nearby channel, swale, or storm sewer.

Pretreatment of stormwater runoff is often provided by using a sedimentation chamber constructed alongside the filtration chamber underground. Furthermore, trash and debris are usually screened at the surface by a grate or other opening leading to the multi-chamber system.

Media filters are designed to capture the Water Quality Volume (WQV) and infiltrate that volume in a 24-hour period (48 hours maximum). Media filters can be designed offline or online but must allow for the bypass of runoff from larger storm events and in the event that the media becomes clogged.

BMP Components

Pretreatment – A sedimentation chamber constructed of reinforced Portland cement concrete is often used for pretreatment and is generally constructed as one unit with a filtration chamber. Pretreatment can also be achieved by using vegetated filter strips, grass swales, forebays, etc. Many factors dictate the types of pretreatment BMP suitable for your site, including available space, an offline or online system, soil characteristics, site topography, and cost. See design guidelines for additional information on the various stormwater BMPs that provide pretreatment. A structural sedimentation chamber is shown in the Design Example.

Filtration Media – Filtration media is typically washed medium-grained concrete sand that meets the requirements of ASTM C-33. Other variations include sand mixed with a compost mixture or other media that enhances adsorption and/or absorption. Filtration media should be separated from adjacent soils by containment within a concrete chamber, an impermeable membrane, or a non-woven filter fabric. The aggregate should allow for permeability at rates that are not too slow or too fast.

Length-Width Dimensions – The area of the bottom of the media filter depends on the volume of storage needed, infiltration media properties, and available space. A filter area that is too small may clog prematurely. A larger filter area will decrease the frequency of maintenance. Length is defined as the longer axis in an x-y plane. Width is defined as the shorter axis in an x-y plane.

Filter Bed Depth, D_f – The depth of the filter bed generally depends on the volume of storage needed, infiltration media properties, and available space. It can also be limited by shallow groundwater or bedrock. Depth is measured from the bottom of a concrete chamber or excavation to the surface of the filter bed (the thickness of filtration media).

Sedimentation Chamber Volume – The sedimentation chamber volume is the volume of storage within the sedimentation chamber using a depth that is equivalent to the filter bed depth.

Media Filter

Surcharge Volume – The surcharge volume is the volume of storage above the filter bed in both the filtration chamber and sedimentation chamber.

Underdrain – The designer should include an underdrain positioned at the bottom of the filter bed that would allow water to drain out of the chamber or excavated area. The underdrain pipe would include a section of slot perforated PVC pipe lying horizontally on a thin layer of sand at the bottom of the chamber or excavation that connects to an adjustable valve and any riser pipe needed to access the valve. It should also include a section of solid PVC pipe that penetrates the concrete chamber wall and discharges to a sewer pipe or is daylighted. Underdrain pipes should be 6-inch diameter minimum.

Overflow Weir – An overflow weir is a weir section within an interior wall of a chamber designed to divert overflow storm events instead of allowing excessive surcharge within a structure. Energy dissipation should be provided where velocities and turbulence are a concern.

Outlet Chamber (for structural media filter) – An outlet chamber is a separate chamber within a media filter structure to collect the underdrain flow and overflow before discharging it by pipe.

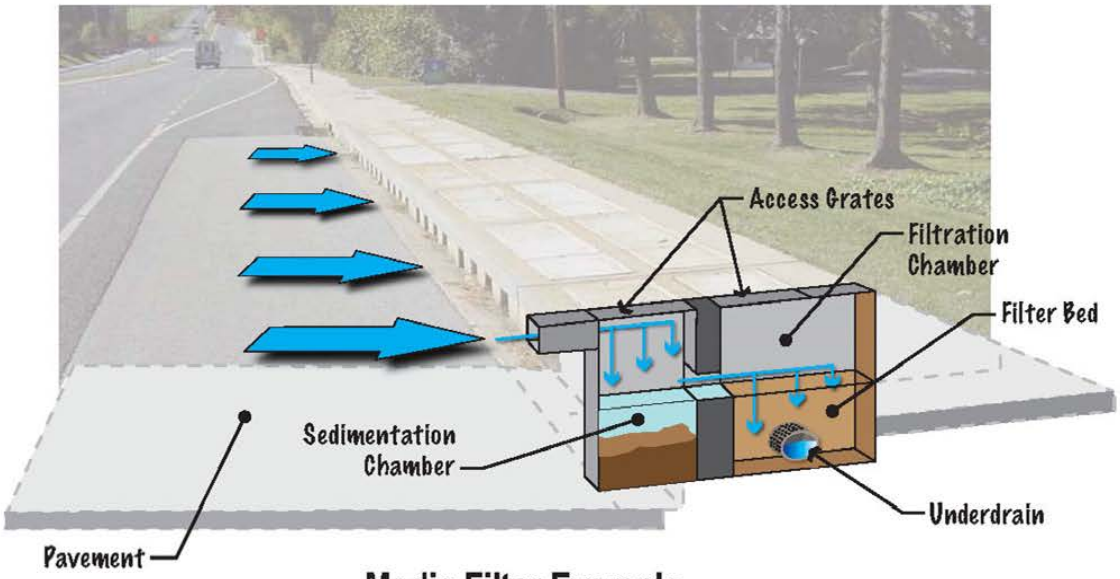

Media Filter Example
Not to Scale

Media Filter

DESIGN CONSIDERATIONS

Media filters are typically used in constrained areas. Check the available right-of-way and consider the various types of media filters. They are generally constructed below grade and can be constructed as an enclosed structure.

The designer will need to consider structural design elements not provided herein for any concrete structures and design so that the structure does not float if high groundwater levels are expected.

Questions to ask yourself…

- Q. What are the site constraints?
- Q. What impact will infiltration have on adjacent pavement, buildings, water bodies, groundwater, etc.?
- Q. What type of pretreatment is appropriate?
- Q. How does the proposed media filter interact with other design storms?
- Q. Is the media filter designed for ease of maintenance?

If the media filter is not contained in a concrete chamber, consideration should be given to the possibility of leaching pollutants into sensitive waters or saturating soils adjacent to infrastructure.

The following table provides pretreatment criteria that should be followed to the extent practical. An example of a sedimentation chamber is provided in the design examples. For other types of pretreatment, the designer should refer to the design guideline specific to the selected pretreatment BMP for additional information on function and design considerations.

Check hydraulic grade lines to make sure there is enough head to allow for gravity filtration and not cause backup.

Minimum wall thickness for a concrete chamber is 6 inches, and minimum thickness of a PVC geomembrane liner is 30-mil.

The design should minimize re-suspension of any sediment in the sedimentation chamber and scour in the filtration media. Energy dissipation is needed for any pipes discharging into the structure.

Design the underdrain system for a 12-hour drawdown time. An orifice plate or a pipe is typically used to control drawdown time. A valve may be used to help control discharge rates if needed. Slot perforations sizes in the underdrain should be checked for potential loss of material or clogging. Cleanouts should also be provided.

An outlet chamber should be used to collect discharge from the underdrains and any overflow within a structure. Additional flow restrictions may be incorporated to provide additional detention within or downstream from the structure.

Media Filter

DESIGN CRITERIA

Description	Value
Maximum Contributing Basin Area	2 acres (online – up to 10-year storm event) 5 acres (offline – WQV only)
Water Quality Volume (WQV)	Reference Chapter 3 of NDOR's *Drainage Design and Erosion Control Manual*
Depth of Filter Bed, D_f	1.5 feet (2 feet maximum) (Note: Underdrain should be positioned below this depth)
Minimum Total Storage Volume	0.75 * WQV (Exclude any storage in filter bed)
Surcharge Volume	0.5 * WQV
Sedimentation Volume	0.25 * WQV
Sedimentation Chamber Area, A_s	Same as Filter Bed Surface Area
Coefficient of Permeability for Filtration Media	0.15 feet/hour (sand)
Filter Bed Drain Time	24 hours (48 hours maximum)
Maximum Underdrain Pipe Separation	10 feet
Pretreatment Criteria	Grass Swale Length – 10 feet (minimum) Vegetated Filter Strip Length – 10 feet (minimum) Forebays – 25% of WQV (minimum)

DESIGN PROCEDURE

Step 1: Calculate Water Quality Volume (WQV)

Calculate WQV as defined in Chapter 3 of NDOR's *Drainage Design and Erosion Control Manual* **OR** use Exhibit 3.5 - Water Quality Volumes and Peak Discharges for Selected Acreages for sites under 5 acres.

Step 2: Calculate the surcharge depth and size the filter bed surface area, A_f

Given that the surcharge volume above the filter bed is approximately one half of the total surcharge volume (1/2 of 0.5*WQV) calculate the surcharge depth.

$$V_{sf} = 0.25*WQV = A_f*S$$

V_{sf} = surcharge volume above the filter bed (ft^3)

S = surcharge depth (ft)

A_f = filter bed surface area (ft^2)

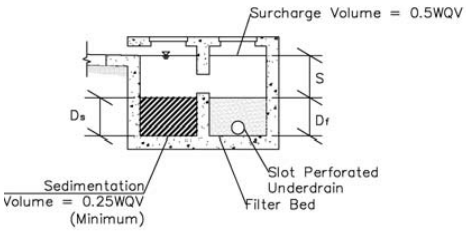

Area of the filter bed is found using Darcy's equation.

$$A_f = \frac{WQV*D_f}{k*t*(D_f+0.5*S)}$$

A_f = filter bed area (ft^2)

D_f = depth of filter bed (ft) (1.5' typical – 2' maximum)

k = coefficient of permeability (ft/hr)
(assume 0.15 ft/hr for sand filtration media)

t = drain time (hours) (design for 24 hours)

Use Darcy's equation for filter bed surface area and solve for surcharge depth, S.

$$0.25*WQV = \frac{WQV*D_f*S}{k*t*(D_f+0.5*S)}$$

$$\frac{0.25*k*t}{D_f} = \frac{S}{(D_f+0.5*S)}$$

$$S = 0.25*k*t + \frac{0.125*k*t*S}{D_f}$$

$$S*\left(\frac{D_f - 0.125*k*t}{D_f}\right) = 0.25*k*t$$

$$S = \frac{0.25*k*t*D_f}{(D_f - 0.125*k*t)}$$

Plug the calculated surcharge depth back into Darcy's equation to size the filter bed surface area, A_f.

Step 3: Size the sedimentation chamber

The sedimentation chamber area will be equal to the area of the filter bed.

$$A_s = A_f$$

A_s = sedimentation chamber area (ft^2)

The depth used to calculate sedimentation volume, equals the depth of the filter bed.

$$D_s = D_f$$

D_s = depth for sedimentation volume (ft)
(measured from the floor of the chamber
to the top of the filter bed)

The sedimentation chamber typically has a 2:1 length to width ratio (minimum). The filter bed surface area dimensions typically match those of the sedimentation chamber.

Media Filter

Step 4: Check diversion or storage and routing of larger storm events

Reference Chapter 1 of NDOR's *Drainage Design and Erosion Control Manual* to check the routing of larger design storm events. Media filters are generally not designed to handle more than a 10-year storm event. They are also not typically designed with additional storage to reduce peak runoff.

Media filters need to be designed to divert runoff greater than the Water Quality Volume Discharge Rate (Q_{WQ}) away from the system. Size the overflow weir at the end of the sedimentation chamber to handle excess inflow, set at the WQV elevation.

Media Filter

DESIGN EXAMPLES

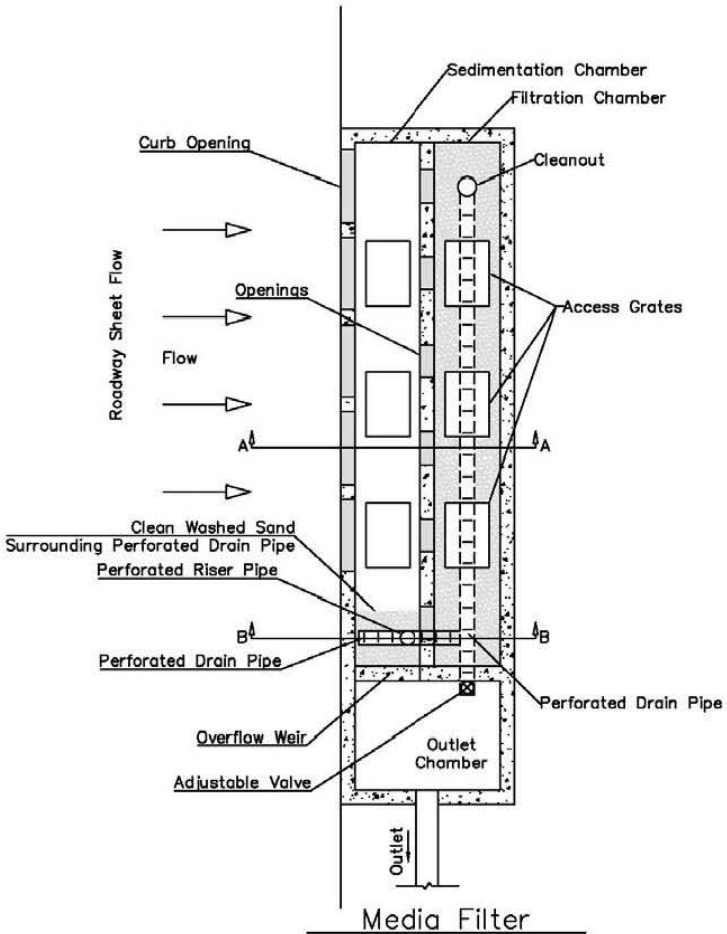

Media Filter
with Curb Openings
(Upper Inlet)
No Scale

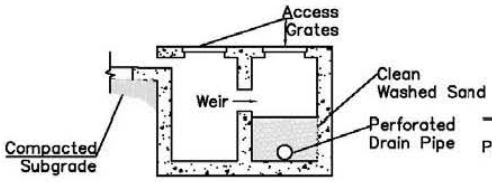

Section A–A
No Scale

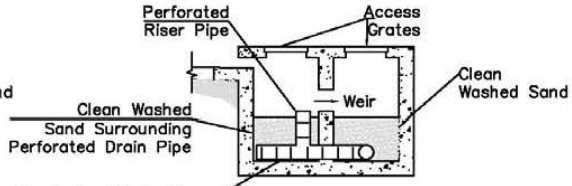

Section B–B
No Scale

Media Filter

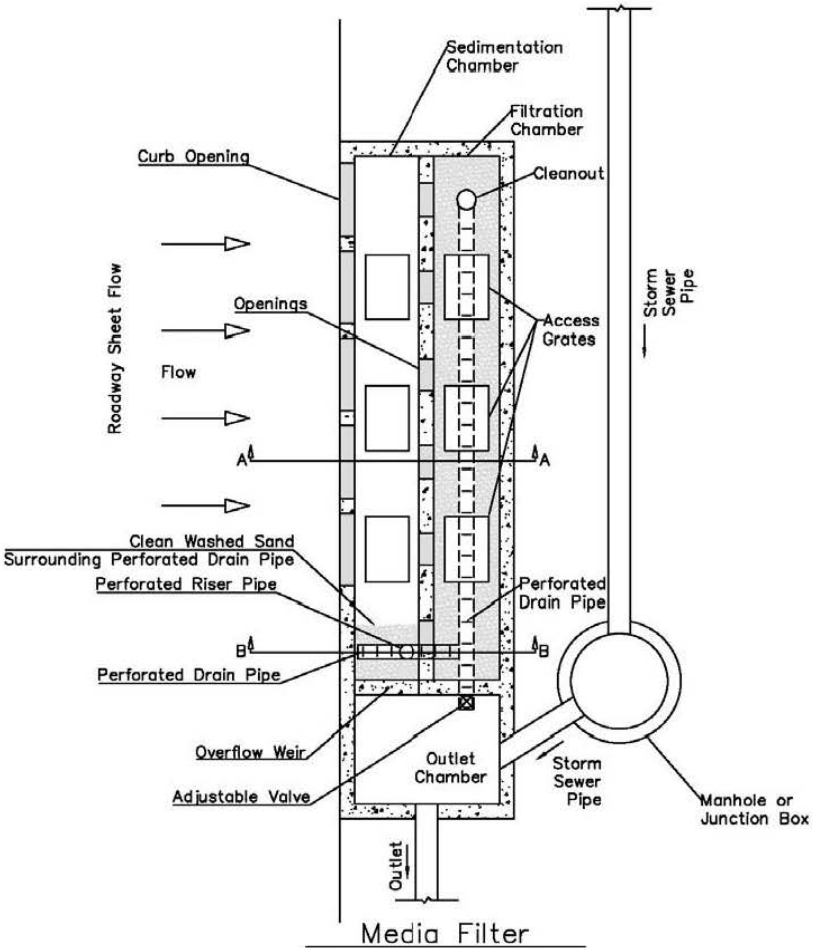

Media Filter
with Curb Openings
(Intermediate Inlet)
No Scale

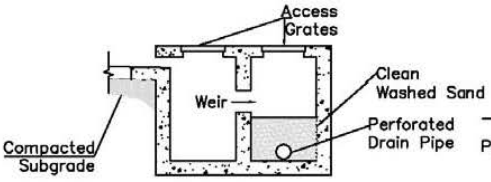

Section A–A
No Scale

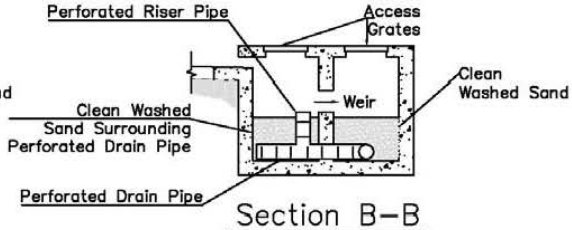

Section B–B
No Scale

Media Filter

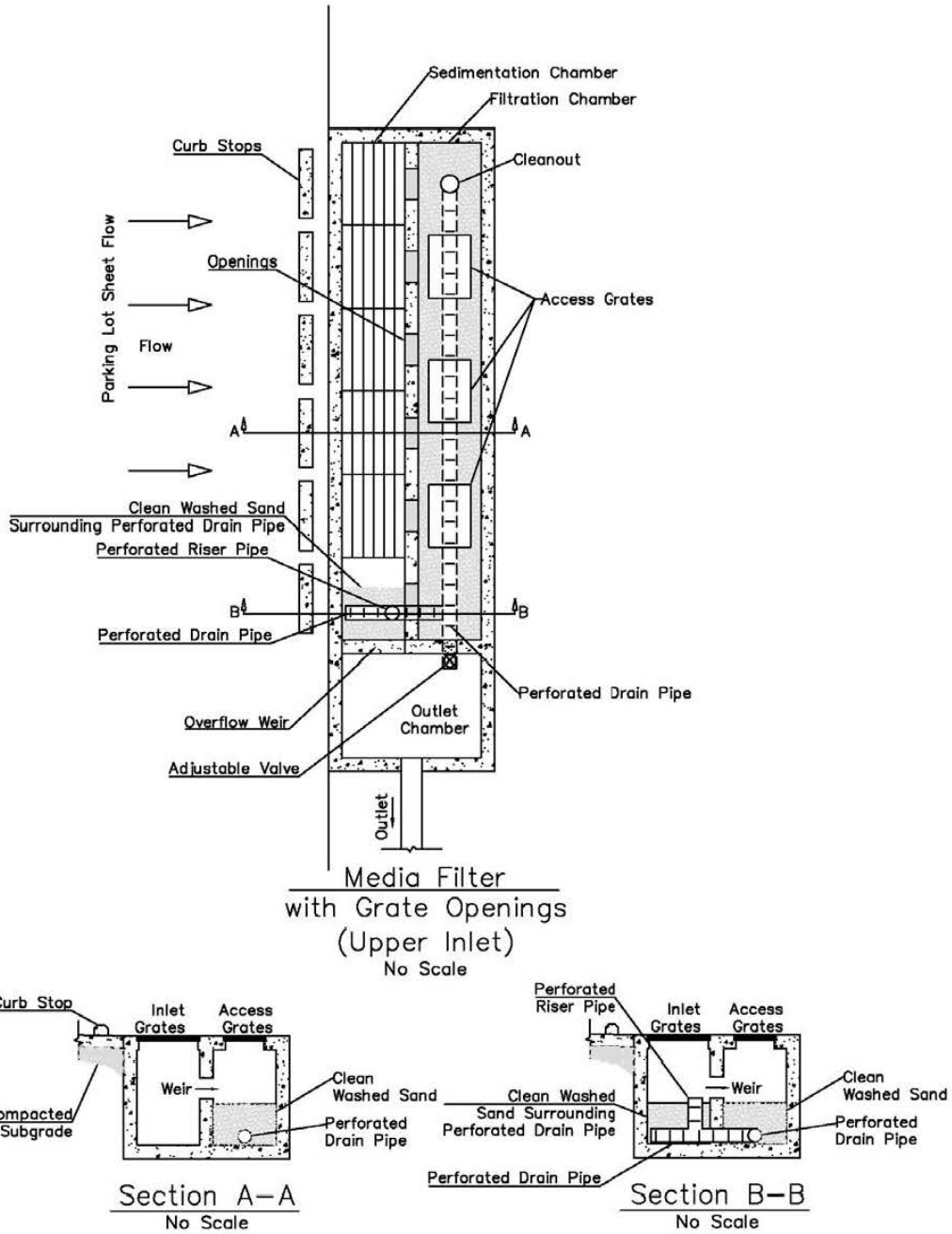

Media Filter

CONSTRUCTION CONSIDERATIONS

- Consider in advance the construction sequencing and erosion and sediment control practices during site construction because media filters are prone to failure when inundated with a high sediment load.
- Stabilize the upgradient contributing draining area before putting the media filters into operation.
- If it is not possible to stabilize the upgradient before beginning construction and flow cannot be temporarily bypassed, provide erosion and sediment control protection for the media filter and consider adding the filtration media after the site has been stabilized.
- Because inlet protection is often not adequate during construction of a media filter, the best protection may be to bypass stormwater away from the facility until vegetation is established and all construction-related sediment has been controlled. Otherwise, the media filter may be unusable immediately after implementation.
- Consider the space needed for any measures required for bypassed flow.
- Check that the structure is watertight before adding the sand bedding by filling the structure with water and checking the water volume after 24 hours. The water volume loss should not exceed 5 percent.
- Make sure that the filtration media is hydraulically compacted by filling the filtration media to the crossover weir height, filling the sedimentation chamber and sand bed full of water, and allowing the filtration media to consolidate as the water drains down. After 24 hours, add filtration media backup to the crossover weir height.
- Consider trench stability and safety during construction. Refer to the Occupational Safety and Health Administration trench safety standards.

MAINTENANCE AND INSPECTION REQUIREMENTS

The maintenance objectives for media filter systems generally include removing litter and sediment and maintaining filtration rates in the filter bed. Inlets, diversion structures, underdrains, and outlets should also be inspected and maintained.

Frequency	Inspection and Maintenance Activity
After Construction (While NPDES Permit is Open)	• Inspect filter bed bi-weekly and after any major rainfall event (≥ ½ inch) for any surface ponding or backups. • Check observation wells 2 days (48 hours) after a major rainfall event (≥ ½ inch) to ensure proper drain time. • Inspect media filter system bi-weekly for sediment buildup in the sedimentation chamber or forebay and on the filter bed surface. Remove sediment when depth in sediment chamber or forebay exceeds 6 inches. Remove sediment on the filter bed surface together with the upper 2 to 3 inches of filtration media at same time as sediment chamber. Replace filtration media that is lost in the process. • Inspect the media filter bi-weekly for trash and debris at the inlets, outlet, and any diversion structure. Remove accumulated trash and debris as needed. • Inspect the contributing area bi-weekly for stabilization and erosion. Repair and reseed as needed.
Semiannually (Through First Two Years From End of Construction)	• Inspect filter bed for any surface ponding or backups. • Check observation wells 2 days (48 hours) after a major rainfall event (≥ ½ inch) to ensure proper drain time. • Inspect media filter system for sediment buildup in the sedimentation chamber or forebay and on the filter bed surface. Remove sediment when depth in sediment chamber or forebay exceeds 6 inches. Remove sediment on the filter bed surface together with the upper 2 to 3 inches of filtration media at same time as sediment chamber. Replace filtration media that is lost in the process. • Inspect the media filter for trash and debris at the inlets, outlet, and any diversion structure. Remove accumulated trash and debris as needed. • Inspect the contributing area for stabilization and erosion. Repair and reseed as needed. • Inspect sedimentation chamber permanent pool for any leaks. Remove sediment and repair as needed. • Inspect for any damage, cracking, or deterioration of concrete. Repair as needed. • Inspect for noticeable odors.

Media Filter

Frequency	Inspection and Maintenance Activity
Annually (After First Two Years From End of Construction)	• Inspect filter bed for any surface ponding or backups. • Check observation wells 2 days (48 hours) after a major rainfall event (≥ ½ inch) to ensure proper drain time. • Inspect media filter system for sediment buildup in the sedimentation chamber or forebay and on the filter bed surface. Remove sediment when depth in sediment chamber or forebay exceeds 6 inches. Remove sediment on the filter bed surface together with the upper 2 to 3 inches of filtration media at same time as sediment chamber. Replace filtration media that is lost in the process. • Inspect the media filter for trash and debris at the inlets, outlet, and any diversion structure. Remove accumulated trash and debris as needed. • Inspect the contributing area for stabilization and erosion. Repair and reseed as needed. • Inspect sedimentation chamber permanent pool for any leaks. Remove sediment and repair as needed. • Inspect for any damage, cracking, or deterioration of concrete. Repair as needed. • Inspect for noticeable odors.
At Failure	• Analyze, redesign, and reconstruct. • Consider raking the surface of the sand bed before going to more costly repair methods. • Consider removing and replacing upper 4 inches of filtration media before removing all filtration media or redesigning.

RESOURCES AND REFERENCES

Arizona Department of Transportation, *ADOT Post-Construction Best Management Practices Manual*. July 2009.

Atlanta Regional Commission. *Georgia Stormwater Management Manual – Volume 2: Technical Handbook*. August 2001.

California Department of Transportation. *BMP Retrofit Pilot Program – Final Report*. January 2004.

California Department of Transportation. *Storm Water Quality Handbook – Project Planning and Design Guide*. July 2010.

Iowa State University – Institute for Transportation. *Iowa Stormwater Management Manual*. October 2009.

The Low Impact Development Center, Inc.

Minnesota Pollution Control Agency. *Protecting Water Quality in Urban Areas - Best Management Practices for Dealing with Storm Water Runoff from Urban, Suburban and Developing Areas of Minnesota*. March 2000.

Nebraska Department of Environmental Quality. *Title 124 - Rules and Regulations for the Design, Operation and Maintenance of Onsite Wastewater Treatment Systems*. December 2007.

Nebraska Department of Roads. *Drainage Design and Erosion Control Manual*. August 2006.

State of New Jersey. *New Jersey Stormwater Best Management Practice Manual*. March 2003.

StormwaterPA. *Pennsylvania Stormwater Best Management Practices Manual*. December 2006.

United States Environmental Protection Agency. *National Pollutant Discharge Elimination System (NPDES) Menu of BMPs*. Last Updated January 2008.

United States Environmental Protection Agency. *Storm Water Technology Fact Sheet - Infiltration Trench*. September 1999.

Upper White River Watershed Alliance. *Green Infrastructure Fact Sheets*. Downloaded February 2012.

Urban Drainage and Flood Control District. *Urban Storm Drainage Criteria Manual Volume 3*. 2010.

Extended Dry Detention

OVERVIEW

Source: Colorado Department of Transportation (CDOT)

Definition

Extended dry detention basins provide temporary storage of stormwater runoff that is released over a specified time. They are typically designed to attenuate the water quality volume and larger storm events. An outlet structure controls the rate of flow out of the basin. Storage can be above or below ground.

Benefits

- Suitable for large drainage areas (typically greater than 10 acres).
- Suitable for low permeability soils.
- Flexible system that provides water quality benefits, as well as detention.
- May be suitable as a retrofit to standard detention basins.

Overview Table

Associated Costs	L	M	H
Design		X	
Construction	X		
Maintenance	X		
Pollutant Removal	**L**	**M**	**H**
Suspended Solids		X	
Nutrients	X	X	
Heavy Metals		X	
Hydrocarbons	X		

Limitations

- Site topography may dictate size and shape.
- Pollutant removal efficiency is lower than most infiltrative measures.
- Design standards and requirements may increase with larger basins and/or higher embankments (see Dam Safety regulations).
- Extended dry detention is not typically suitable in areas with a high groundwater table or groundwater contamination issues.

Extended Dry Detention

BEST MANAGEMENT PRACTICE (BMP) DESCRIPTION

Extended dry detention basins provide temporary storage of runoff and are frequently constructed with a multi-stage outlet structure to draw the Water Quality Volume (WQV) down over a minimum of 24 hours (72 hours maximum). The extended drawdown time is provided to improve pollutant removal efficiencies and is the primary difference between a standard detention basin and an extended detention basin. Basins are designed to fully drain between storm events.

Extended dry detention basins are typically landscaped with non-invasive, preferably native, vegetation that is suitable for the dry and wet cycles of the basin. They can be vegetated with turf grass, as well, if needed.

The removal efficiencies of extended dry detention basins, while greater than standard dry detention, are not as great as infiltration type treatment BMPs. Pretreatment is desirable to help control sediment from being deposited in the basin. Permanent micropools may be added to the basin to provide additional treatment.

The designer is referred to wet detention or stormwater wetland systems if a constant flow source is evident or the seasonal high groundwater table rises above the bottom of the proposed basin.

Extended dry detention basins are typically designed online though offline systems may yield higher removal efficiencies. Extended detention basins can accept sheet flow from adjacent ground or flow from an outfall as a point discharge. Energy dissipation may be required for any point discharge to avoid erosion and spread the flow out.

BMP Components

Pretreatment BMP – Pretreatment can be achieved by using vegetated filter strips, grass swales, forebays, etc. Forebays are recommended for end-of-pipe treatment. Many factors dictate the types of pretreatment BMP suitable for the site, including available space, an offline or online system, soil characteristics, site topography, and cost. See design guidelines for additional information about the various stormwater BMPs that provide pretreatment.

Berm (Embankment) – A berm is a compacted earthen ridge designed to capture and detain stormwater flows in the extended dry detention basin.

Extended Detention Depth – The depth of water stored in the extended dry detention basin based on the Water Quality Volume (WQV) as defined in Chapter 3 of the Nebraska Department of Roads (NDOR) *Drainage Design and Erosion Control Manual*. It generally depends on the available area and the volume of storage needed.

Total Depth – The total depth of the extended dry detention basin from the lowest elevation of the bottom to the top of the berm or embankment. It includes a minimum of 1 foot of freeboard from the design water surface elevation in the emergency spillway to the top of the berm or embankment.

Outlet Structure (Principal Spillway) – An outlet structure is a standpipe or other structure designed to draw down stormwater that is stored in the basin. In an extended dry detention

Extended Dry Detention

basin, a multi-stage structure is typically needed. A pipe or an orifice opening is typically provided at the bottom of the basin to draw down the WQV. Other controls (orifice or weir) are provided to draw down larger storm events at predetermined maximum rates.

Overflow Spillway (Auxiliary or Emergency Spillway) – An overflow spillway is a protected area along a berm or an excavated channel designed to convey overflow storm events instead of allowing overtopping of the berm. Consideration should be given to the velocity of flow over the spillway, at any intermediate grade changes and at the toe. Protection or energy dissipation should be provided where velocities and turbulence are a concern.

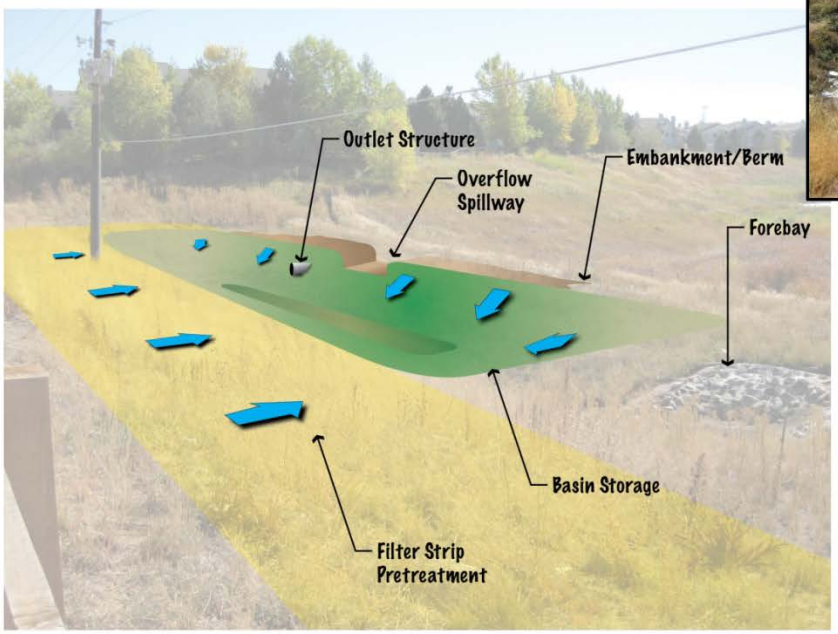

Extended Dry Detention Example
Not to Scale

Outlet Structure Example

Extended Dry Detention

DESIGN CONSIDERATIONS

The size and depth of the extended dry detention basin largely depends on the natural topography of the site. The designer should try to minimize excavation but will need enough soil to construct an embankment.

Questions to ask yourself…

Q. Is the site suitable for extended dry detention?

Q. What can be done if the bottom slope is fairly steep?

Q. What type of pretreatment is appropriate?

Q. Are there other considerations for large basins?

The bottom of the basin should be gently sloped to reduce the potential for erosion from incoming stormwater runoff. A low flow channel, preferably natural, may be needed to route trickle flow. A low flow channel that is serpentine in form may help decrease the channel slope and reduce velocities. Short circuiting between a point discharge source and the outlet structure should be avoided. An earthen berm or other type of baffle may be needed to prevent this.

If the infiltration rate of underlying site soils is greater than 1.0 inch/hour, consider designing an infiltrative stormwater BMP instead of an extended dry detention. If the bottom of the extended dry detention basin is at or below the seasonal high groundwater table, consider designing a wet detention basin or stormwater wetland.

For soils that are compacted due to the placement of fill material or construction equipment, the upper 6 inches of soil on the bottom and sides of the basin may need to be amended to improve soils for planting. NDOR staff will provide guidance on any amendments.

The following table identifies pretreatment criteria that should be followed to the extent practical. The designer should refer to the design guideline specific to the selected pretreatment BMP for additional information on function and design considerations.

The Nebraska Department of Natural Resources (NDNR) has jurisdiction over “dams” as defined in Chapter 46, Article 16: Safety of Dams and Reservoirs and Title 458, Nebraska Administrative Code, Chapters 1-13; NDNR Rules for the Safety of Dams and Reservoirs. Verify whether or not your project falls within NDNR jurisdiction and may need to meet NDNR dam design standards; particularly for embankments 6 feet high or greater and those with an impounding capacity at maximum storage elevation greater than 15 acre-feet

Required elements include trash racks, anti-seepage collars, and energy dissipation.

The design should consider the volume of sedimentation that will occur. The designer should assume that a 10 percent reduction in volume will occur before maintenance. The forebay and micropool should be used to account for sediment volume. Designers should include design dimension and depth of sediment markers in the detention basin design.

Extended Dry Detention

DESIGN CRITERIA

Description	Value
Minimum Contributing Basin Area	5 acres
Maximum Extended Detention Depth	3 feet
Maximum Berm Height	5 feet
Minimum Basin Bottom Slope	0.5% - 1.0%
Maximum Basin Bottom Slope	2% (typical cross slope 2%)
Extended Detention Volume (V_{EX})	1.1 * WQV (accounts for sedimentation)
Minimum WQV Drawdown Time	24 hours (72 hours maximum)
Water Quality Volume (WQV)	Reference Chapter 3 of NDOR's *Drainage Design and Erosion Control Manual*
Pretreatment Criteria	Grass Swale Length – 10 feet (minimum) Vegetated Filter Strip Length – 10 feet (minimum) Forebays – 10% of WQV (minimum)

DESIGN PROCEDURE

Step 1: Calculate Water Quality Volume (WQV)

Calculate the WQV as defined in Chapter 3 of NDOR's *Drainage Design and Erosion Control Manual*.

Step 2: Calculate extended detention volume

Multiply WQV by 1.1 to account for storage lost to sediment dissipation.

$$V_{EX} = WQV*1.1$$

V_{EX} = extended detention volume (cf)

Step 3: Design extended detention pond

Pond design is an iterative process. Estimate the minimum area needed using the extended detention volume and the maximum extended detention basin depth of three (3) feet.

$$A_{MIN} = \frac{V_{EX}}{3}$$

A_{MIN} = minimum area for extended detention (sf)

Approximate the location of a berm or control point for overflow and calculate the actual volume taking into consideration the maximum depth allowed, existing grades, and any excavation that may be needed. If the volume is insufficient or maximum depths are exceeded, re-evaluate the location of the berm and/or excavation and calculate the volume again. Repeat this process until all applicable design criteria, including minimum bottom slope, are met.

Extended Dry Detention

Step 4: Design low flow channel

Design the low flow channel meet minimum slope using a meandering flow path if needed to meet that criterion. Typical low flow channel dimensions are shown as part of Design Examples.

Step 5: Size the orifice for WQV drawdown

Calculate the orifice size for the Minimum WQV Drawdown Time provided in the Design Criteria table above using the average discharge rate and average hydraulic head.

Find the average discharge rate:

$$Q = WQV/t/3600$$

Q = average orifice discharge rate (cfs)

t = WQV drawdown time (hours)

Find the orifice area:

$$A = Q/[C*(2*g*h)^{0.5}]$$

A = orifice area (ft^2)

C = orifice discharge coefficient, dimensionless (0.60 typ)

g = acceleration of gravity (ft/s^2)

h = average hydraulic head (ft)
(height measured from orifice invert to midpoint of extended detention depth – assumes orifice is small relative to total height)

Find the orifice diameter:

$$d = (4*A/3.14)^{0.5}*12$$

d = orifice diameter (in)

Step 6: Check diversion or storage and routing of larger storm events

Reference Chapter 1 of NDOR's *Drainage Design and Erosion Control Manual* to check the routing of larger design storm events.

Design offline extended dry detention basins to divert runoff greater than the Water Quality Volume Discharge Rate (Q_{WQ}) away from the system. Design online extended dry detention basins for the WQV and integrate any additional storage into the feature. Additional storage to reduce peak runoff will be added above the WQV.

NDOR recommends the use of the NRCS TR-55 procedure (See Chapter 1) to determine the runoff volume and discharge rate used to design a detention system for a project site. The Rational Method and Modified Rational Method will not be acceptable.

Extended Dry Detention

DESIGN EXAMPLES

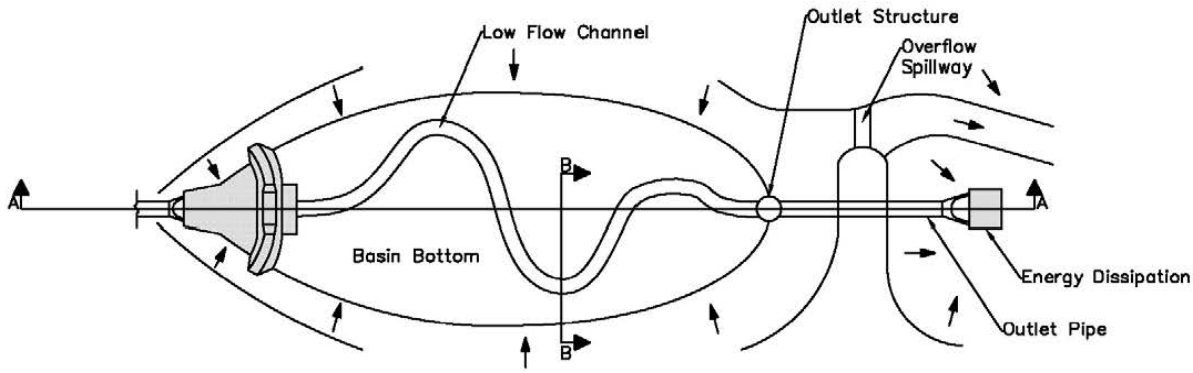

Extended Dry Detention
No Scale

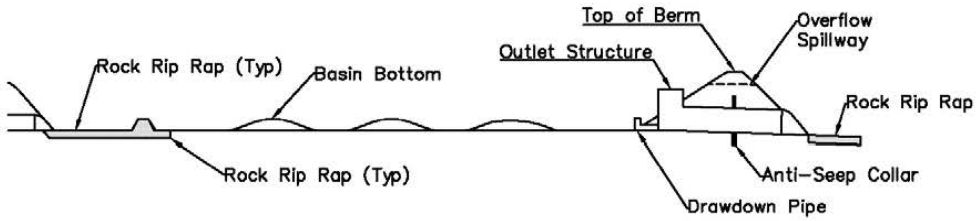

Section A–A
No Scale

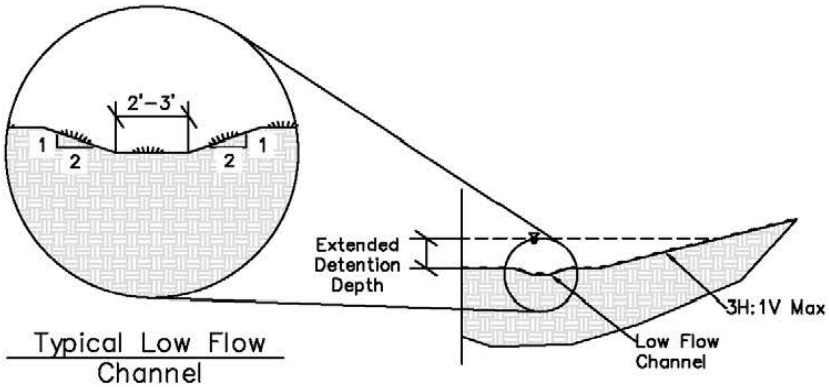

Typical Low Flow Channel
No Scale

Section B–B
No Scale

Extended Dry Detention

CONSTRUCTION CONSIDERATIONS

- Consider in advance the construction sequencing and erosion and sediment control practices during site construction because, unless accounted for in the design, inundation with a high sediment load will decrease the intended storage capacity and increase maintenance costs.
- Depending on the size of the basin, inlet protection alone may not be adequate during construction. Intermediate erosion control upstream from the inlet will help reduce sedimentation in the basin.
- If the extended detention basin area is being used as a sediment basin during construction, particularly as wet sediment basin, construct the bottom elevation of the sediment basin higher in elevation than the future basin bottom elevation so that saturated soils may be removed, along with accumulated sediment, and so that seeding and/or planting can take place.
- Take care to limit compaction of the bottom of the basin area from construction or other traffic during the course of construction. If this is not possible, take steps to reduce compaction of underlying soils.
- Temporary irrigation of the extended dry detention basin may be needed to help with the establishment of vegetation.

MAINTENANCE AND INSPECTION REQUIREMENTS

The maintenance objectives for an extended dry detention basin include providing litter control, monitoring erosion and sedimentation, and maintaining outlet control structures. Diversion structures, discharge points, and forebays should also be inspected and maintained, along with any other pretreatment stormwater BMPs.

Frequency	Inspection and Maintenance Activity
After Construction (While NPDES Permit is Open)	• Inspect extended dry detention basin bi-weekly and after any major rainfall event (≥ ½ inch) for any unintended surface ponding or indicators that water has ponded for an extended period of time. • Check extended dry detention basin 3 days (72 hours) after a major rainfall event (≥ ½ inch) to ensure drainage of the basin. • Inspect extended dry detention basin bi-weekly to ensure the intended vegetation is establishing well. Consider reseeding if needed. • Inspect extended dry detention basin bi-weekly for erosion and any damage by equipment or vehicles after every major rainfall event (≥ ½ inch). Repair as needed. • Inspect extended dry detention basin bi-weekly for sediment buildup on the bottom of the basin and at any diversion structures, outlets, and forebays. Remove sediment as needed. • Remove trash and debris bi-weekly from the basin and any diversion structures, outlets, and forebays. • Inspect and maintain pretreatment stormwater BMPs in accordance with their respective design guidelines.

Semi-Annually (Through First Two Years From End of Construction)	• Inspect extended dry detention basin for any surface ponding or indicators that water has ponded for an extended period of time.
	• Check extended dry detention basin 3 days (72 hours) after a major rainfall event (≥ ½ inch) to ensure drainage of the basin.
	• Inspect extended dry detention basin to ensure there is a dense, uniform stand of the intended vegetation. Consider reseeding if needed.
	• Mow grass to control weeds.
	  ○ Mow grass to a height not less than 6 inches.
	  ○ Do not let the weeds get over the 12-inch maximum height before mowing.
	  ○ Remove and properly dispose of cuttings from the extended dry detention basin.

Extended Dry Detention

Frequency	Inspection and Maintenance Activity
	• Inspect extended dry detention basin for erosion and damage by equipment or vehicles. Repair as needed. • Inspect extended dry detention basin for sediment buildup on the bottom of the basin. Remove sediment as needed. • Inspect the basin and any diversion structures, outlets, and forebays for trash and debris, erosion, sediment buildup, and structural damage. Repair as needed. • Inspect and maintain pretreatment stormwater BMPs in accordance with their respective design guidelines.

Annually (After First Two Years From End of Construction)	• Inspect extended dry detention basin for any surface ponding or indicators that water has ponded for an extended period of time.
	• Check extended dry detention basin 3 days (72 hours) after a major rainfall event (≥ ½ inch) to ensure drainage of the basin.
	• Inspect extended dry detention basin to ensure there is a dense, uniform stand of the intended vegetation. Consider reseeding if needed.
	• Mow grass to control weeds.
	  ○ Mow grass to a height not less than 6 inches.
	  ○ Do not let the weeds get over the 12-inch maximum height before mowing.
	  ○ Remove and properly dispose of cuttings from the infiltration basin.
	• Inspect extended dry detention basin for erosion and damage by equipment or vehicles. Repair as needed.
	• Inspect extended dry detention basin for sediment buildup on the bottom of the basin. Remove sediment as needed.
	• Inspect the basin and any diversion structures, outlets, and forebays for trash and debris, erosion, sediment buildup, and structural damage. Repair as needed. Inspect and maintain pretreatment stormwater BMPs in accordance with their respective design guidelines.

RESOURCES AND REFERENCES

Arizona Department of Transportation, *ADOT Post-Construction Best Management Practices Manual*. July 2009.

Atlanta Regional Commission. *Georgia Stormwater Management Manual – Volume 2: Technical Handbook*. August 2001.

California Department of Transportation. *Storm Water Quality Handbook – Project Planning and Design Guide*. July 2010.

Iowa State University – Institute for Transportation. *Iowa Stormwater Management Manual*. October 2009.

Minnesota Pollution Control Agency. *Protecting Water Quality in Urban Areas - Best Management Practices for Dealing with Storm Water Runoff from Urban, Suburban and Developing Areas of Minnesota*. March 2000.

Nebraska Department of Natural Resources. *Chapter 46, Article 16: Safety of Dams and Reservoirs*. December 2011.

Nebraska Department of Natural Resources. *Title 458, Nebraska Administrative Code, Chapters 1-13; NDNR Rules for the Safety of Dams and Reservoirs*. June 2008.

Nebraska Department of Roads. *Drainage Design and Erosion Control Manual*. August 2006.

North Carolina Department of Transportation. *Stormwater Best Management Practices Toolbox, Version 1*. March 2008.

State of New Jersey. *New Jersey Stormwater Best Management Practice Manual*. March 2003.

StormwaterPA. *Pennsylvania Stormwater Best Management Practices Manual*. December 2006.

Truckee Meadows Regional Storm Water Quality Management Program. *Structural Controls Design Manual*. April 2007.

Urban Drainage and Flood Control District. *Urban Storm Drainage Criteria Manual Volume 3*. 2010.

Wet Detention

OVERVIEW

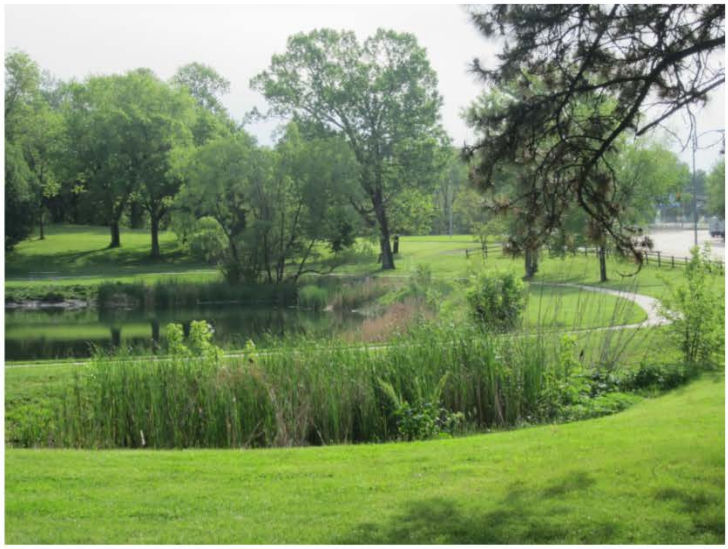

Source: City of Omaha

Definition

Wet detention basins retain a permanent pool of water and provide temporary storage for stormwater runoff above the permanent pool that is released over a specified time. They are typically designed to attenuate larger storm events as well. An outlet structure controls the rate of flow for the various conditions.

Benefits

- Suitable for large drainage areas.
- Effective in removing pollutants, including dissolved solids.
- Offers a flexible system that can provide water quality benefits as well as detention in some cases.
- Suitable for sites with shallow groundwater.

Overview Table

Associated Costs	L	M	H
Design		X	
Construction	X		
Maintenance	X		
Pollutant Removal	**L**	**M**	**H**
Suspended Solids		X	X
Nutrients		X	
Heavy Metals		X	
Hydrocarbons		X	

Limitations

- Site topography may dictate size and shape.
- A minimum drainage area is needed to maintain a permanent pool (or a groundwater source is needed).
- Design requirements may increase with larger basins and/or higher embankments.
- Mosquito and algae problems may develop.
- Wet detention requires moderate to high permeability soils (unless stable groundwater sources are present)

Wet Detention

BEST MANAGEMENT PRACTICE (BMP) DESCRIPTION

Wet detention basins are generally formed when constructing an embankment to capture runoff or excavating to detain runoff and provide storage for a permanent pool of water. The minimum design volume of water in the permanent pool is based on a fraction of the Water Quality Volume (WQV). Temporary storage is provided above the permanent pool elevation to capture the remaining WQV and to release that volume over a minimum of 24 hours (72 hours maximum).

Wet detention basins are often constructed with a multi-stage outlet structure to attenuate peak flow from major storm events in addition to the WQV. The extended drawdown time improves pollutant removal efficiencies and reduces the size of the typical wet detention basin.

Wet detention basins are typically landscaped around the perimeter of the pool with non-invasive, preferably native, vegetation that is suitable for the wet and dry cycles associated with extended detention. The shallow area along the shoreline is typically suitable for wetland plantings and can improve water quality, habitat, and aesthetics.

Pretreatment is desirable to help improve removal efficiencies and contain some of the sediment for easier removal at a later time.

BMP Components

Pretreatment BMP – Pretreatment can be achieved by using vegetated filter strips, grass swales, forebays, etc. Forebays are recommended for end-of-pipe treatment. Many factors dictate the types of pretreatment BMP suitable for the site, including available space, an offline or online system, soil characteristics, site topography, and cost. See design guidelines for additional information on the various stormwater BMPs that provide pretreatment.

Soils – The types of soils on site will partially determine whether the site is suitable to maintain a permanent pool. Refer to the project geotechnical report and the United States Department of Agriculture (USDA) Natural Resources Conservation Service (NRCS) Soil Survey for the project area to help determine project soil characteristics for design.

Berm (Embankment) – A berm is a compacted earthen ridge designed to capture and detain stormwater flows in the wet detention basin.

Permanent Pool Depth – The permanent pool depth represents the depth of storage in the wet detention basin. It generally depends on the available area and the volume of storage needed.

Extended Detention Depth – The extended detention depth represents the depth of water above the permanent pool elevation that is temporarily stored and released over a specific period of time.

Total Depth – The total depth of the wet detention basin from the lowest elevation of the bottom to the top of the berm or embankment. For a basin that is online, this depth includes the capacity required to handle runoff from the design storm frequency defined in Chapter 1 of NDOR's *Drainage Design and Erosion Control Manual* and any additional storage for peak flow

reduction. It includes a minimum of 1 foot of freeboard from the design water surface elevation in the emergency spillway to the top of the berm or embankment.

Outlet Structure (Principal Spillway) – An outlet structure is a standpipe or structure designed to draw down stormwater that is stored in the basin. In a wet detention basin, a multi-stage structure is typically needed. A pipe or an orifice opening is typically provided at the bottom of the basin to draw down the WQV. Other controls (orifice or weir) are provided to draw down larger storm events at predetermined maximum rates.

Overflow Spillway (Auxiliary or Emergency Spillway) – An overflow spillway is a protected area along a berm or an excavated channel designed to convey overflow storm events instead of allowing overtopping of the berm. Consideration should be given to the velocity of flow over the spillway, at any intermediate grade changes, and at the toe. Protection or energy dissipation should be provided where velocities and turbulence are a concern.

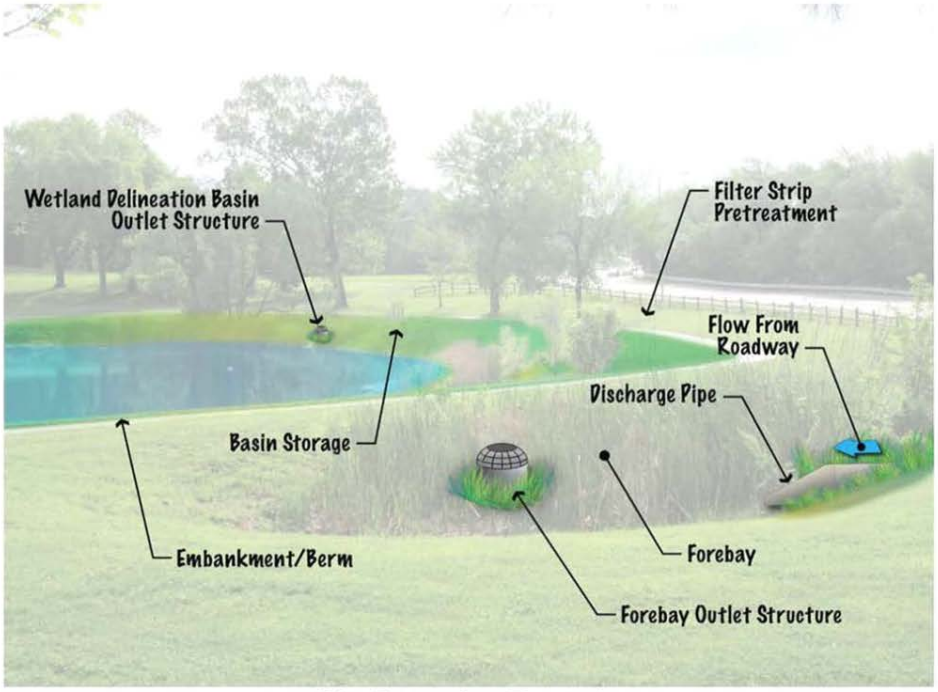

Wet Detention Example
Not to Scale

Wet Detention

DESIGN CONSIDERATIONS

Questions to ask yourself…

- Q. Is there a source of water to maintain a permanent pool?
- Q. What about impacts on streams and dam safety requirements?
- Q. How does the proposed wet detention basin interact with other design storms?
- Q. What are some other safety features to consider?

Site characteristics are very important when designing a wet detention basin and should be taken into consideration early in the design process.

Check available right-of-way when determining the footprint. Consider the ramifications of standing water adjacent to the roadway and any safety considerations, such as locating the stormwater wetland outside clear recovery zones and whether fencing is needed.

Site topography dictates whether an embankment can be constructed to create the storage need or whether excavation is necessary.

Wet detention basins need a drainage area of sufficient size to maintain a permanent pool. The minimum suggested ratio of drainage area to pond volume (acres:acre-feet) is 15:1; however, the ability to maintain the pool varies from site to site and may be closer to 60:1 in western Nebraska. Calculations should be done to check the water balance. Groundwater is a source that should be considered in these calculations.

The Nebraska Department of Natural Resources (NDNR) has jurisdiction over "dams" as defined in Chapter 46, Article 16: Safety of Dams and Reservoirs and Title 458, Nebraska Administrative Code, Chapters 1-13; NDNR Rules for the Safety of Dams and Reservoirs. Verify whether or not your project falls within NDNR jurisdiction and may need to meet NDNR dam design standards; particularly for embankments 6 feet high or greater and those with an impounding capacity at maximum storage elevation greater than 15 acre-feet.

Wet detention basins are susceptible to leaching pollutants into sensitive waters or saturating soils adjacent to infrastructure. The designer should reference design criteria for setback distances.

A 25-foot vegetative buffer (minimum) is required to help provide additional water quality benefits, shoreline protection, and habitat. A 10-foot to 15-foot-wide zone of shallow water (0 to 18 inches in depth) along the shoreline is required for similar reasons.

A 10-foot to 15-foot-wide safety bench above the shoreline is required if sideslopes are steeper than 4H:1V. Any mowing should stop on the safety bench.

The following table provides pretreatment criteria that should be followed to the extent practical. The designer should refer to the design guideline specific to the selected pretreatment BMP for additional information on function and design considerations.

Wet Detention

DESIGN CRITERIA

Description	Value
Minimum Contributing Basin Area	10 acres (verify water budget to ensure the design elevation for the permanent pool is maintained)
Watershed Area to Permanent Pool Volume Ratio	See Figure 1 for preliminary design (verify water budget to ensure the design elevation for the permanent pool is maintained)
Typical Pool Length:Width Ratio	2:1 or greater
Permanent Pool Depth	3 feet to 7 feet (Minimum 50% of area ≥ 5 feet)
Maximum Permanent Pool Depth	10 feet
Maximum Extended Detention Depth	3 feet (above permanent pool)
Minimum Permanent Pool Volume (V_{PP})	0.6 * WQV
Extended Detention Volume (V_{EX})	0.5 * WQV
Minimum V_{EX} Drawdown Time	24 hours (72 hours maximum)
Water Quality Volume (WQV)	Reference Chapter 3 of NDOR's *Drainage Design and Erosion Control Manual*
Pretreatment Criteria	Grass Swale Length – 10 feet (minimum) Vegetated Filter Strip Length – 10 feet (minimum) Forebays – 10% of WQV (minimum)
Setback Distances	Surface Water – 50 feet Private Drinking Water Wells – 100 feet Public Drinking Water Supply Wells (Non-Community System) – 100 feet Public Drinking Water Supply Wells (Community System) – 500 feet Water Lines (Pressure) – 25 feet Water Lines (Suction) – 100 feet Property Lines – 5 feet Foundations (NDOR)* – 20 feet (assumes no basement) Foundations (Neighbors)* – 30 feet (assumes no basement)

* Add 10 feet to setback distance when foundations are lower in elevation than water quality feature or adjacent to a full depth basement.

Wet Detention

Figure 1. Guide for Estimating Required Drainage Area (Acres) for Each Acre-Foot of Storage in Basin

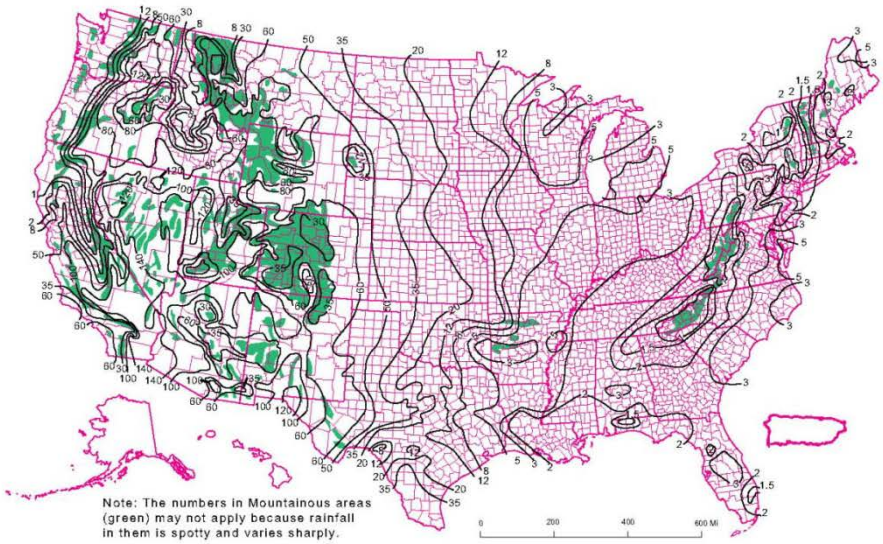

DESIGN PROCEDURE:

Step 1: Calculate Water Quality Volume (WQV)

Calculate WQV as defined in Chapter 3 of NDOR's *Drainage Design and Erosion Control Manual*.

Step 2: Check to see whether the drainage can support the permanent pool in a stormwater wetland.

Using Figure 1, determine the approximate permanent pool volume sustained for a given drainage area for the project area.

$$V_{PMax} = \frac{A_{Total}}{A_{AF}}$$

V_{PMax} = maximum permanent pool volume (ft^3)

A_{Total} = actual drainage area (ac)

A_{AF} = minimum drainage area per ac-ft of storage (ft^{-1}) (From Figure 1)

Wet Detention

Check to see whether estimated WQV is less than V_{PMax}

If WQV ≤ V_{PMax}, it's likely that the drainage area can sustain the minimum permanent pool. Verify this by calculating the water budget.

If WQV > V_{PMax}, it's less likely that the drainage area can sustain the minimum permanent pool. Verify this by calculating the water budget or selecting another type of BMP.

Step 3: Allocate WQV to determine volumes and areas of the permanent pool and extended detention

Use the ratios provided in the design criteria table above to determine the volumes of the permanent pool and extended detention.

V_{PP} = 0.6*WQV

V_{PP} = permanent pool volume (cf)

V_{EX} = 0.5*WQV

V_{EX} = extended detention volume (cf)

Once the volumes have been determined, use the typical depths associated with each zone to lay out the stormwater wetland. Take into consideration the typical permanent pool length:width ratio (2:1) and provide a 10"-15' wide shallow water zone (< 18" depth) around the perimeter of the permanent pool as illustrated in Design Examples, Section B-B.

Provide a 25' wide vegetative buffer along the edge of the permanent pool. If slopes adjacent to the extended detention pond volume aresteeper than 4H:1V, also provide a 10" to 15' wide safety bench (≤ 4%).

Step 4: Size the orifice for WQV drawdown

Use the average discharge rate and the average hydraulic head to calculate the orifice size for the Minimum WQV Drawdown Time provided in the design criteria table above.

Find the average discharge rate:

$Q = V_{EX}/t/3600$

Q = average orifice discharge rate (cfs)

t = V_{EX} drawdown time (hours)

Find the orifice area:

$$A = Q/[C*(2*g*h)^{0.5}]$$

A = orifice area (ft^2)

C = orifice discharge coefficient, dimensionless (0.60 typical)

g = acceleration of gravity (ft/s^2)

h = average hydraulic head (ft)
(height measured from orifice invert to midpoint of extended detention depth – assumes orifice is small relative to total height)

Find the orifice diameter:

$$d = (4*A/3.14)^{0.5}*12$$

d = orifice diameter (in)

Step 5: Check diversion or storage and routing of larger storm events

Reference Chapter 1 of NDOR's *Drainage Design and Erosion Control Manual* to check the routing of larger design storm events.

Design offline extended detention basins to divert runoff greater than the Water Quality Volume Discharge Rate (Q_{WQ}) away from the system. Design online extended detention basins for the WQV and integrate any additional storage into the feature. Additional storage to reduce peak runoff will be added above the WQV.

NDOR recommends the use of the NRCS TR-55 procedure (See Chapter 1) to determine the runoff volume and discharge rate used to design a detention system for a project site. The Rational Method and Modified Rational Method will not be acceptable.

Wet Detention

DESIGN EXAMPLES

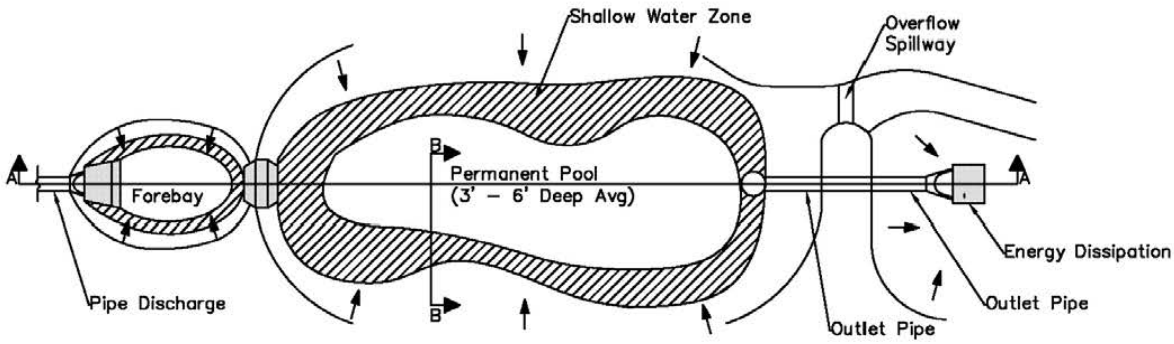

Wet Detention Pond
No Scale

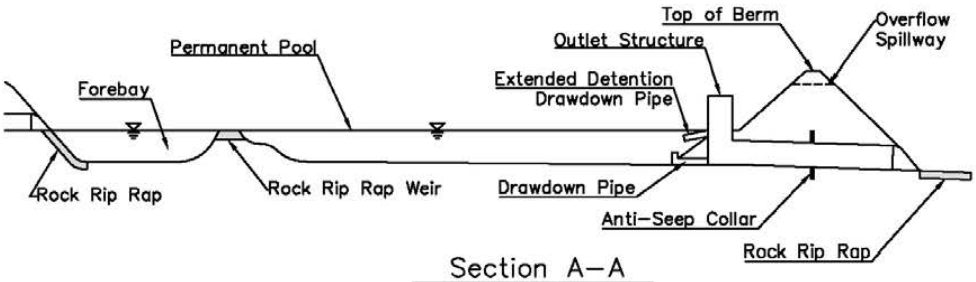

Section A–A
No Scale

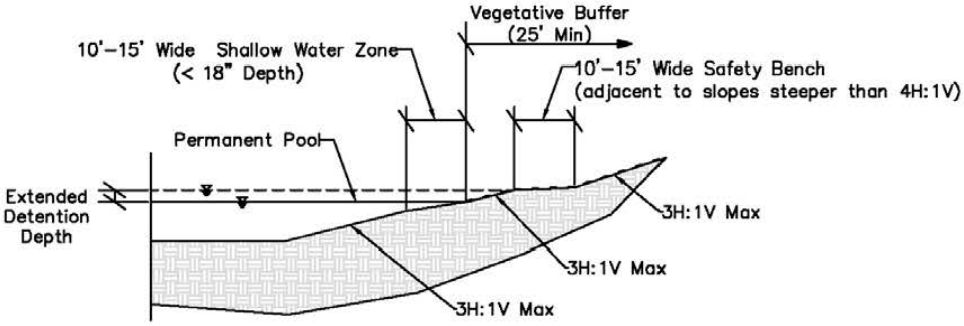

Section B–B
No Scale

CONSTRUCTION CONSIDERATIONS

- Consider in advance the construction sequencing and erosion and sediment control practices during site construction because, unless accounted for in the design, inundation with a high sediment load will decrease the intended storage capacity and increase maintenance costs.
- If possible, use the basin to control sediment during construction. However, the sediment will have to be removed before completing the project unless additional sedimentation volume has been incorporated into the design and that design amount has not been exceeded.
- Provide stabilization above the permanent pool elevation once sediment has been removed and any drawdown valves are closed to establish the permanent pool.
- If groundwater is a water source for the wet detention basin, and excavation below the groundwater table is necessary, excavate the bottom in such a manner as to leave the soil in a natural, unsmeared, and uncompacted condition.
- Consider ordering any shoreline wetland plant stock early on to minimize potential delays and time the arrival of that stock to ensure water supply and optimum survival.

MAINTENANCE AND INSPECTION REQUIREMENTS

The maintenance objectives for a wet detention basin include providing litter control, monitoring erosion and sedimentation, and maintaining outlet control structures. Diversion structures, discharge points, and forebays should also be inspected and maintained, along with any other pretreatment stormwater BMPs.

Frequency	Inspection and Maintenance Activity
After Construction (While NPDES Permit is Open)	• Check wet detention basin 3 days (72 hours) after a major rainfall event (≥ ½ inch) to ensure drainage of the basin to permanent pool elevation. • Inspect wet detention basin bi-weekly and after any major rainfall event (≥ ½ inch) for a water surface elevation that is consistently lower than design permanent pool elevation. If so, investigate to determine the cause (such as inflow, drought, or excessive seepage). • Inspect wet detention basin bi-weekly to ensure the intended vegetation is establishing well. Consider reseeding if needed. • Inspect wet detention basin bi-weekly for erosion and any damage by equipment or vehicles after every major rainfall event (≥ ½ inch). Repair as needed. • Inspect wet detention basin bi-weekly for excessive sediment buildup on the bottom of the basin and at any diversion structures, outlets, and forebays. Remove sediment as needed. • Remove trash and debris bi-weekly from the basin and any diversion structures, outlets, and forebays. • Inspect and maintain pretreatment stormwater BMPs in accordance with their respective design guidelines.

Semiannually (Through First Two Years From End of Construction)	• Check wet detention basin 3 days (72 hours) after a major rainfall event (≥ ½ inch) to ensure drainage of the basin to permanent pool elevation.
	• Inspect wet detention basin for a water surface elevation that is consistently lower than design permanent pool elevation. If so, investigate to determine the cause (such as inflow, drought, or excessive seepage).
	• Inspect wet detention basin to ensure there is a dense, uniform stand of the intended vegetation. Consider reseeding if needed.
	• Mow grass to control weeds around the perimeter of the pool
	  ○ Mow grass to a height not less than 6 inches.
	  ○ Do not let the weeds get over the 12-inch maximum height before mowing.
	  ○ Remove and properly dispose of cuttings.

Wet Detention

Frequency	Inspection and Maintenance Activity
	• Inspect wet detention basin for erosion and damage by equipment or vehicles. Repair as needed. • Inspect wet detention basin for excessive sediment buildup on the bottom of the basin. Remove sediment as needed. • Inspect the basin and any diversion structures, outlets, and forebays for trash and debris, erosion, sediment buildup, and structural damage. Repair as needed. • Inspect and maintain pretreatment stormwater BMPs in accordance with their respective design guidelines.

Annually (After First Two Years From End of Construction)	• Check wet detention basin 3 days (72 hours) after a major rainfall event (≥ ½ inch) to ensure drainage of the basin to permanent pool elevation.
	• Inspect wet detention basin for a water surface elevation that is consistently lower than design permanent pool elevation. If so, investigate to determine the cause (such as inflow, drought, or excessive seepage).
	• Inspect wet detention basin to ensure there is a dense, uniform stand of the intended vegetation. Consider reseeding if needed.
	• Mow grass to control weeds around the perimeter of the pool
	  ○ Mow grass to a height not less than 6 inches.
	  ○ Do not let the weeds get over the 12-inch maximum height before mowing.
	  ○ Remove and properly dispose of cuttings.
	• Inspect wet detention basin for erosion and damage by equipment or vehicles. Repair as needed.
	• Inspect wet detention basin for excessive sediment buildup on the bottom of the basin. Remove sediment as needed.
	• Inspect the basin and any diversion structures, outlets, and forebays for trash and debris, erosion, sediment buildup, and structural damage. Repair as needed.
	• Inspect and maintain pretreatment stormwater BMPs in accordance with their respective design guidelines.

RESOURCES AND REFERENCES

Atlanta Regional Commission. *Georgia Stormwater Management Manual – Volume 2: Technical Handbook*. August 2001.

California Department of Transportation. *BMP Retrofit Pilot Program – Final Report*. January, 2004.

California Department of Transportation. *Storm Water Quality Handbook – Project Planning and Design Guide*. July 2010.

Iowa State University – Institute for Transportation. *Iowa Stormwater Management Manual*. October 2009.

Maryland Department of the Environment. *Maryland Stormwater Design Manual*. 2009.

Minnesota Pollution Control Agency. *Protecting Water Quality in Urban Areas - Best Management Practices for Dealing with Storm Water Runoff from Urban, Suburban and Developing Areas of Minnesota*. March 2000.

Nebraska Department of Environmental Quality. *Title 124 - Rules and Regulations for the Design, Operation and Maintenance of Onsite Wastewater Treatment Systems*. December 2007.

Nebraska Department of Natural Resources. *Chapter 46, Article 16: Safety of Dams and Reservoirs*. December 2011.

Nebraska Department of Natural Resources. *Title 458, Nebraska Administrative Code, Chapters 1-13; NDNR Rules for the Safety of Dams and Reservoirs*. June 2008.

Nebraska Department of Roads. *Drainage Design and Erosion Control Manual*. August 2006.

New York State Department of Environmental Conservation. *New York State Stormwater Management Design Manual*. August 2010.

Ohio Department of Natural Resources. *Ohio Pond Management – Pond Construction*. Downloaded May 2012.

State of New Jersey. *New Jersey Stormwater Best Management Practice Manual*. March 2003.

StormwaterPA. *Pennsylvania Stormwater Best Management Practices Manual*. December 2006.

Truckee Meadows Regional Storm Water Quality Management Program. *Structural Controls Design Manual*. April 2007.

United States Department of Agriculture Soil Conservation Service. *Agriculture Handbook Number 590, Ponds – Planning, Design, Construction*. 1997.

Urban Drainage and Flood Control District. *Urban Storm Drainage Criteria Manual Vol 3*. 2010.

Stormwater Wetland

OVERVIEW

Source: Nebraska Department of Roads (NDOR)

Definition

Stormwater wetlands are shallow, heavily vegetated basins with varying topography below a permanent pool elevation that creates low and high marshes and pools. They are generally a flow-through type system with temporary storage and can be online or offline.

Benefits

- Good pollutant removal rates.
- Flexible system that can provide water quality benefits, as well as detention in some cases.
- Suitable for shallow groundwater conditions.
- Often provides good habitat and aesthetic value.

Overview Table

Associated Costs	L	M	H
Design		X	
Construction		X	
Maintenance		X	
Pollutant Removal	**L**	**M**	**H**
Suspended Solids			X
Nutrients		X	
Heavy Metals		X	X
Hydrocarbons		X	

Limitations

- Larger drainage areas that provide continuous baseflow or a groundwater source are needed.
- Considerable space is needed for this type of stormwater BMP.
- Stormwater wetlands may not be suitable for sites with high pollutant loadings if groundwater is present.
- Minimum setbacks must be met if groundwater is present.

Stormwater Wetland

BEST MANAGEMENT PRACTICE (BMP) DESCRIPTION

Stormwater wetlands are typically basins that capture stormwater runoff and pass it through a pool of water of varying depths that support wetland and aquatic vegetation. Stormwater wetlands require continuous baseflow or groundwater to maintain a permanent pool of water and vegetation.

The minimum design volume of water in the permanent pool is based on a fraction of the Water Quality Volume (WQV). Temporary storage for extended detention is provided above the permanent pool elevation. The stored volume is released over a minimum of 24 hours (72 hours maximum). The extended drawdown time is provided to improve pollutant removal efficiencies.

Stormwater wetlands are often constructed online with a multi-stage outlet structure to attenuate peak flow from major storm events in addition to passing the WQV. They can also be designed as an offline system. Pretreatment is desirable to help control sediment from being deposited in the stormwater wetland.

BMP Components

Pretreatment BMP – Pretreatment can be achieved by using vegetated filter strips, grass swales, forebays, etc. Forebays are recommended for end-of-pipe treatment. Many factors dictate the types of pretreatment BMP suitable for the site, including available space, an offline or online system, soil characteristics, site topography, and cost. See design guidelines for additional information on the various stormwater BMPs that provide pretreatment.

Soils – The types of soils on site will partially determine whether the site is suitable to maintain a permanent pool. Refer to the project geotechnical report and the United States Department of Agriculture (USDA) Natural Resources Conservation Service (NRCS) Soil Survey for the project area to help determine project soil characteristics for design.

Berm (Embankment) – A berm is a compacted earthen ridge designed to capture and detain stormwater flows in the stormwater wetland.

Permanent Pool – The permanent pool is the body of water stored during "normal" conditions when the wetland water surface is at the lowest control elevation on an outlet structure (excluding any drawdown pipe intended for maintenance).

Low Marsh Zone – A low marsh zone is a zone in the permanent pool that supports vegetation in depths of water ranging from 6 to 18 inches as measured from the permanent pool elevation.

High Marsh Zone – A high marsh zone is a zone in the permanent pool that supports vegetation in depths of water less than 6 inches as measured from the permanent pool elevation.

Micropool – A micropool is a deeper zone in the permanent pool with depths of water ranging from 1.5 feet to 6 feet. Micropools are needed at the outlet structure to provide additional storage for re-suspended sediment, help prevent the outlet from clogging, and help mitigate thermal effects. They can also be placed in other areas to improve aquatic function.

Stormwater Wetland

Extended Detention Depth – The extended detention depth is the depth of water above the permanent pool elevation that is temporarily stored and released over a specific period of time.

Outlet Structure (Principal Spillway) – An outlet structure is a standpipe or structure designed to draw down stormwater that is stored in the basin. In a stormwater wetland, a multi-stage structure is typically needed. A pipe or an orifice opening is typically provided at the bottom of the basin to draw down the WQV. Other controls (orifice or weir) are provided to draw down larger storm events at predetermined maximum rates.

Overflow Spillway (Auxiliary or Emergency Spillway) – An overflow spillway is a protected area along a berm or an excavated channel designed to convey overflow storm events instead of allowing overtopping of the berm. Consideration should be given to the velocity of flow over the spillway, at any intermediate grade changes, and at the toe. Protection or energy dissipation should be provided where velocities and turbulence are a concern.

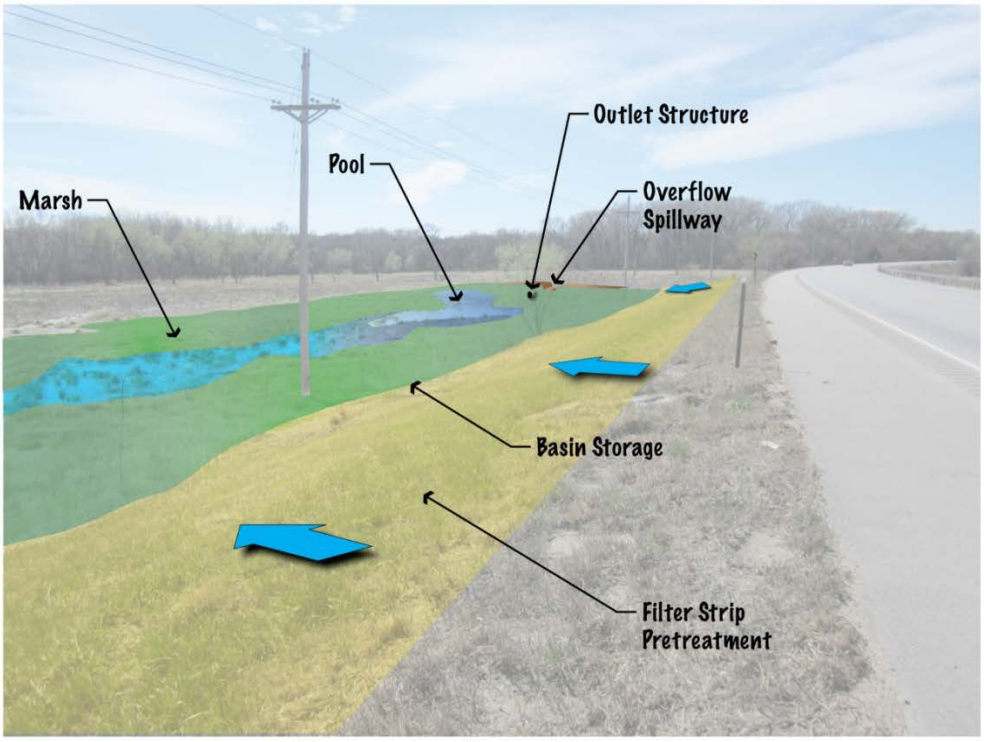

Stormwater Wetland Example
Not to Scale

Stormwater Wetland

DESIGN CONSIDERATIONS

Questions to ask yourself…

Q. Is there a source of water to maintain a permanent pool?

Q. What about impacts on streams and dam safety requirements?

Q. What impact will infiltration have on adjacent pavement, buildings, water bodies, groundwater, etc.?

Q. What are some other safety features to consider?

Site characteristics are very important when designing stormwater wetlands and should be taken into consideration early in the design process.

Check available right-of-way when determining the footprint. Consider the ramifications of standing water adjacent to the roadway and any safety considerations such as locating the stormwater wetland outside clear recovery zones and whether fencing is needed.

Site topography dictates whether an embankment can be constructed to create the storage need or whether excavation is necessary.

Stormwater wetlands need a drainage area of sufficient size to maintain a permanent pool. The minimum suggested ratio of drainage area to pond volume (acres:acre-feet) is 15:1. However, the ability to maintain the pool is going to vary from site to site and may be closer to 60:1 in western Nebraska (see design criteria). Calculations should be done to check the water balance. Groundwater is a source that should be considered in these calculations.

The Nebraska Department of Natural Resources (NDNR) has jurisdiction over "dams" defined in Chapter 46, Article 16: Safety of Dams and Reservoirs and Title 458, Nebraska Administrative Code, Chapters 1-13; NDNR Rules for the Safety of Dams and Reservoirs. Verify whether or not your project falls within NDNR jurisdiction and may need to meet NDNR dam design standards, particularly for embankments 6 feet high or greater and those with an impounding capacity at maximum storage elevation greater than 15 acre-feet.

Stormwater wetlands are susceptible to leaching pollutants into sensitive waters or saturating soils adjacent to infrastructure. The designer should reference design criteria for setback distances.

A 25-foot wide vegetative buffer (minimum) is required to help provide additional water quality benefits, shoreline protection, and habitat. A 10-foot to 15-foot-wide zone of shallow water (0 to 18 inches in depth – low and high marsh zones) along the shoreline is required in areas where the permanent pool depth is 3 feet or greater.

A 10-foot to 15-foot-wide safety bench above the shoreline is required if sideslopes are steeper than 4H:1V. Any mowing should stop on the safety bench.

The following table provides pretreatment criteria that should be followed to the extent practical. The designer should refer to the design guideline specific to the selected pretreatment BMP for additional information on function and design considerations.

Stormwater Wetland

DESIGN CRITERIA

Description	Value
Minimum Contributing Basin Area	10 acres (verify water budget to ensure the design elevation for the permanent pool is maintained)
Watershed Area to Permanent Pool Volume Ratio	See Figure 1 for preliminary design (verify water budget to ensure the design elevation for the permanent pool is maintained)
Typical Permanent Pool Length:Width Ratio	2:1 or greater
Maximum Permanent Pool Depth	6 feet
Maximum Extended Detention Depth	3 feet (above permanent pool)
Volume of Forebay (V_{FB}) and Micropool (V_{MP})*	0.2 to 0.4 * WQV (where V_{FB} = 0.1 * WQV) (accounts for volume lost to sedimentation)
Marsh Volume (V_M)*	0.6 to 0.8 * WQV (50% high marsh & 50% low marsh)
Extended Detention Volume (V_{EX})	0.5 * WQV
Minimum V_{EX} Drawdown Time	24 hours (72 hours maximum)
Water Quality Volume (WQV)	Reference Chapter 3 of NDOR's *Drainage Design and Erosion Control Manual*
Pretreatment Criteria	Grass Swale Length – 10 feet (minimum) Vegetated Filter Strip Length – 10 feet (minimum) Forebays – 10% of WQV (minimum)
Setback Distances	Surface Water – 50 feet Private Drinking Water Wells – 100 feet Public Drinking Water Supply Wells (Non-Community System) – 100 feet Public Drinking Water Supply Wells (Community System) – 500 feet Water Lines (Pressure) – 25 feet Water Lines (Suction) – 100 feet Property Lines – 5 feet Foundations (NDOR)** – 20 feet (assumes no basement) Foundations (Neighbors)** – 30 feet (assumes no basement)

* The permanent pool volume equals the forebay, micropool, and marsh volume combined and should be equal to or greater than the WQV.
** Add 10 feet to setback distance when foundations are lower in elevation than water quality feature or adjacent to a full depth basement.

Stormwater Wetland

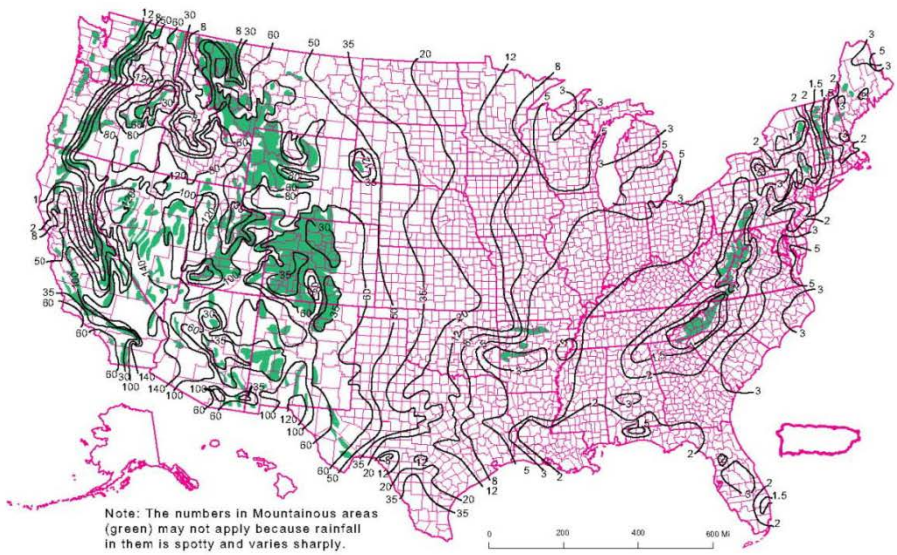

Figure 1 - Guide for Estimating Required Drainage Area (Acres) for Each Acre-Foot of Storage in Basin

DESIGN PROCEDURE:

Step 1: Calculate Water Quality Volume (WQV)

Calculate WQV as defined in Chapter 3 of NDOR's *Drainage Design and Erosion Control Manual*.

Step 2: Check to see whether the drainage can support the permanent pool in a stormwater wetland.

Using Figure 1, determine the approximate permanent pool volume sustained for a given drainage area for the project area.

$$V_{PMax} = \frac{A_{Total}}{A_{AF}}$$

V_{PMax} = maximum permanent pool volume (ft^3)

A_{Total} = actual drainage area (ac)

A_{AF} = minimum drainage area per ac-ft of storage (ft^{-1}) (From Figure 1)

Check to see whether estimated WQV is less than V_{PMax}

If WQV ≤ V_{PMax}, it's likely that the drainage area can sustain the minimum permanent pool. Verify this by calculating the water budget.

If WQV > V_{PMax}, it's less likely that the drainage area can sustain the minimum permanent pool. Verify this by calculating the water budget or select another type of BMP.

Step 3: Allocate WQV to determine volumes and areas of the forebay and micropools, marsh pools, and extended detention

Use the ratios provided in the design criteria table above to determine the volumes of the forebay and micropools, marsh pools (both high and low), and extended detention.

V_{FB} = 0.1*WQV

V_{MP} = (0.3-0.1)*WQV

V_{MLow} = ½*(1.0-0.3)*WQV

V_{MLow} = low marsh volume (ft^3)

V_{MHigh} = ½*(1.0-0.3)* WQV

V_{MHigh} = high marsh volume (ft^3)

V_{EX} = 0.5*WQV

Once the volumes have been determined, use the typical depths associated with each zone to lay out the stormwater wetland. Take into consideration the typical permanent pool length:width ratio (2:1) and provide a 10'-15' wide shallow water zone (< 18" depth) around the perimeter of the permanent pool as shown in Design Examples, Section B-B.

Provide a 25' wide vegetative buffer along the edge of the permanent pool. If slopes adjacent to the extended detention pond volume are steeper than 4H:1V, also provide a 10" to 15' wide safety bench (≤ 4%).

Step 4: Size the Orifice for Extended Detention Volume Drawdown

Use the average discharge rate and average hydraulic head to calculate the orifice size for the Minimum V_{EX} Drawdown Time provided in the design criteria table above.

Find the average discharge rate:

$Q = V_{EX}/t/3600$

Q = average orifice discharge rate (cfs)

t = V_{EX} drawdown time (hours)

Find the orifice area:

$$A = Q/[C*(2*g*h)^{0.5}]$$

A = orifice area (ft^2)

C = orifice discharge coefficient, dimensionless (0.60 typ)

g = acceleration of gravity (ft/s^2)

h = average hydraulic head (ft)
(height measured from orifice invert to midpoint of extended detention depth – assumes orifice is small relative to total height)

Find the orifice diameter:

$$d = (4*A/3.14)^{0.5}*12$$

d = orifice diameter (in)

Step 5: Check diversion or storage and routing of larger storm events

Reference Chapter 1 of NDOR's *Drainage Design and Erosion Control Manual* to check the routing of larger design storm events.

Design offline extended detention basins to divert runoff greater than the Water Quality Volume Discharge Rate (Q_{WQ}) away from the system. Design online extended detention basins for the WQV and integrate any additional storage into the feature. Additional storage to reduce peak runoff, if needed, is added above the WQV.

NDOR recommends the use of the NRCS TR-55 procedure (See Chapter 1) to determine the runoff volume and discharge rate used to design a detention system for a project site. The Rational Method and Modified Rational Method will not be acceptable.

Stormwater Wetland

DESIGN EXAMPLES

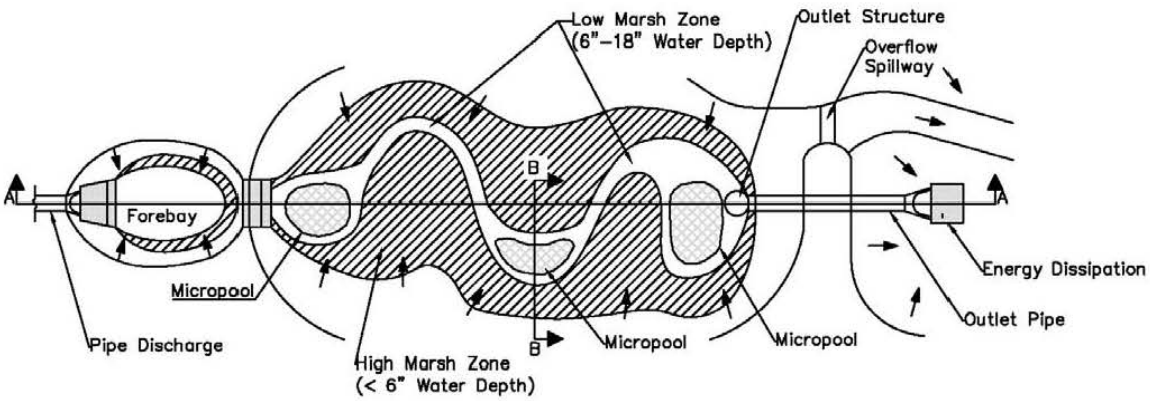

Stormwater Wetland
No Scale

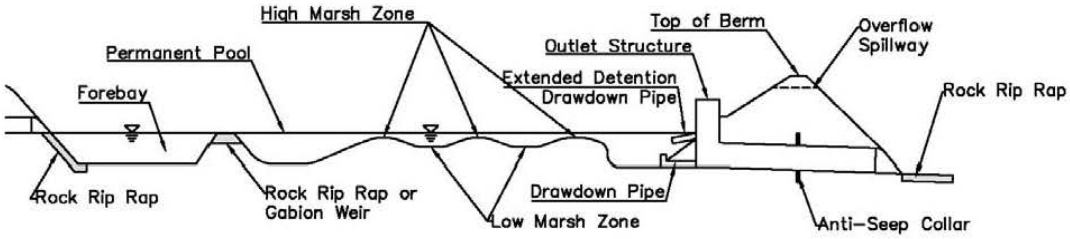

Section A–A
No Scale

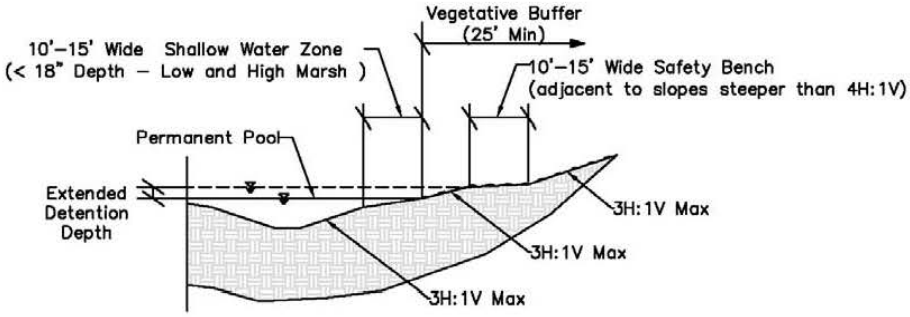

Section B–B
No Scale

CONSTRUCTION CONSIDERATIONS

- Consider in advance the construction sequencing and erosion and sediment control practices during site construction because stormwater wetlands are prone to failure when inundated with a high sediment load.
- Provide inlet protection while the stormwater wetland is being constructed. The best protection may be to bypass stormwater away from the facility until the stormwater wetland is fine graded and areas above the permanent pool elevation have been stabilized.
- Consider the space needed for pretreatment and any swale required for bypassed flow.
- If it is not possible to stabilize upgradient before beginning construction and flow cannot be temporarily bypassed, provide erosion and sediment control protection for the stormwater wetland.
- If the stormwater wetland relies on groundwater for a water source, excavate the bottom in such a manner as to leave the soil in a natural, unsmeared, and uncompacted condition.
- Protect completed stormwater wetland areas from construction or other traffic during the course of construction.
- Consider ordering any wetland plant stock early to minimize potential delays. Time the arrival of that stock to ensure water supply and optimum survival.
- If possible, delay the installation of any plantings until after you've had a chance to close the drawdown pipe, fill the wetland to permanent pool elevation, and observe actual depths of water. Adjust planting types and placement accordingly for optimum survival.
- De-water the stormwater wetland at least 3 days before planting, assuming the water source is surface water fed, to try to dry the site.

Stormwater Wetland

MAINTENANCE AND INSPECTION REQUIREMENTS

The maintenance objectives for a stormwater wetland include providing litter control, monitoring erosion and sedimentation, and maintaining outlet control structures. Diversion structures, discharge points, and forebays should also be inspected and maintained, along with any other pretreatment stormwater BMPs.

Frequency	Inspection and Maintenance Activity
After Construction (While NPDES Permit is Open)	• Check stormwater wetland 3 days (72 hours) after a major rainfall event (≥ ½ inch) to ensure drainage of the basin to permanent pool elevation. • Inspect stormwater wetland bi-weekly and after any major rainfall event (≥ ½ inch) for a water surface elevation that is consistently lower than design permanent pool elevation. If so, investigate to determine the cause (such as inflow, drought, or excessive seepage). • Inspect stormwater wetland bi-weekly to ensure the intended vegetation is establishing well. Consider reseeding if needed. • Inspect stormwater wetland bi-weekly for erosion and any damage by equipment or vehicles after every major rainfall event (≥ ½ inch). Repair as needed. • Inspect stormwater wetland bi-weekly for excessive sediment buildup on the bottom of the basin and at any diversion structures, outlets, and forebays. Remove sediment as needed. • Remove trash and debris biweekly from the basin and any diversion structures, outlets, and forebays. • Inspect and maintain pretreatment stormwater BMPs in accordance with their respective design guidelines.

Semiannually (Through First Two Years From End of Construction)	• Check stormwater wetland 3 days (72 hours) after a major rainfall event (≥ ½ inch) to ensure drainage of the basin to permanent pool elevation.
	• Inspect stormwater wetland for a water surface elevation that is consistently lower than design permanent pool elevation. If so, investigate the cause (i.e. inflow, drought, or excessive seepage).
	• Inspect stormwater wetland to ensure there is a dense, uniform stand of the intended vegetation. Consider reseeding if needed.
	• Mow grass to control weeds around the perimeter of the pool
	  ○ Mow grass to a height not less than 6 inches.
	  ○ Do not let the weeds get over the 12-inch maximum height before mowing.
	  ○ Remove and properly dispose of cuttings.

Stormwater Wetland

Frequency	Inspection and Maintenance Activity
	• Inspect stormwater wetland for erosion and damage by equipment or vehicles. Repair as needed. • Inspect stormwater wetland for excessive sediment buildup on the bottom of the basin. Remove sediment as needed. • Inspect the wetland and any diversion structures, outlets, and forebays for trash and debris, erosion, sediment buildup, and structural damage. Repair as needed. • Inspect and maintain pretreatment stormwater BMPs in accordance with their respective design guidelines.

Annually (After First Two Years From End of Construction)	• Check stormwater wetland 3 days (72 hours) after a major rainfall event (≥ ½ inch) to ensure drainage of the basin to permanent pool elevation.
	• Inspect stormwater wetland for a water surface elevation that is consistently lower than design permanent pool elevation. If so, investigate to determine the cause (such as inflow, drought, or excessive seepage).
	• Inspect stormwater wetland to ensure there is a dense, uniform stand of the intended vegetation. Consider reseeding if needed.
	• Mow grass to control weeds around the perimeter of the pool
	  ○ Mow grass to a height not less than 6 inches.
	  ○ Do not let the weeds get over the 12-inch maximum height before mowing.
	  ○ Remove and properly dispose of cuttings.
	• Inspect stormwater wetland for erosion and damage by equipment or vehicles. Repair as needed.
	• Inspect stormwater wetland for excessive sediment buildup on the bottom of the basin. Remove sediment as needed.
	• Inspect the wetland and any diversion structures, outlets, and forebays for trash and debris, erosion, sediment buildup, and structural damage. Repair as needed.
	• Inspect and maintain pretreatment stormwater BMPs in accordance with their respective design guidelines.

RESOURCES AND REFERENCES

Atlanta Regional Commission. *Georgia Stormwater Management Manual – Volume 2: Technical Handbook*. August 2001.

Iowa State University – Institute for Transportation. *Iowa Stormwater Management Manual*. October 2009.

Maryland Department of the Environment. *Maryland Stormwater Design Manual*. 2009.

Minnesota Pollution Control Agency. *Protecting Water Quality in Urban Areas - Best Management Practices for Dealing with Storm Water Runoff from Urban, Suburban and Developing Areas of Minnesota*. March 2000.

Nebraska Department of Environmental Quality. *Title 124 - Rules and Regulations for the Design, Operation and Maintenance of Onsite Wastewater Treatment Systems*. December 2007.

Nebraska Department of Natural Resources. *Chapter 46, Article 16: Safety of Dams and Reservoirs*. December 2011.

Nebraska Department of Natural Resources. *Title 458, Nebraska Administrative Code, Chapters 1-13; NDNR Rules for the Safety of Dams and Reservoirs*. June 2008.

Nebraska Department of Roads. *Drainage Design and Erosion Control Manual*. August 2006.

New York State Department of Environmental Conservation. *New York State Stormwater Management Design Manual*. August 2010.

State of New Jersey. *New Jersey Stormwater Best Management Practice Manual*. March 2003.

StormwaterPA. *Pennsylvania Stormwater Best Management Practices Manual*. December 2006.

Truckee Meadows Regional Storm Water Quality Management Program. *Structural Controls Design Manual*. April 2007.

United States Department of Agriculture Soil Conservation Service. *Agriculture Handbook Number 590, Ponds – Planning, Design, Construction*. 1997.

Urban Drainage and Flood Control District. *Urban Storm Drainage Criteria Manual Volume 3*. 2010.

Pervious Pavement

OVERVIEW

Source: City of Omaha

Definition

Pervious pavement systems allow the infiltration of stormwater runoff through a pavement surface into an aggregate base. The aggregate base provides temporary storage of captured rainfall where it then infiltrates into underlying soils or is collected by an underdrain. Pervious surfaces typically include concrete, asphalt, or pavers.

Benefits

- Suitable for use on highly urbanized sites and other locations where space is limited.
- Flexible system that can provide water quality benefits, as well as detention.
- Suitable for use in areas of compacted fill or low permeability soils.
- Less likely to form ice than conventional pavement and reduces hydroplaning.

Overview Table

Associated Costs	L	M	H
Design		X	
Construction			X
Maintenance			X
Pollutant Removal	**L**	**M**	**H**
Suspended Solids			X
Nutrients		X	
Heavy Metals		X	X
Hydrocarbons		X	X

Limitations

- Pervious pavement is not typically suited to traffic with heavy loads and/or high volume.
- Higher costs are associated with this feature.
- Pervious pavement is generally not appropriate where high sediment loads are a concern due to clogging and associated maintenance.
- Pervious pavement is not suitable in areas with a high groundwater table.
- Special consideration should be given to expansive or collapsible soils.

Pervious Pavement

BEST MANAGEMENT PRACTICE (BMP) DESCRIPTION

Pervious pavement systems (also known as permeable or porous pavement systems) allow stormwater runoff, typically sheet flow, to infiltrate and pass through voids in the surface layer material and into base and subbase aggregates where it is temporarily stored and released slowly. Stormwater then infiltrates into the soil or is collected by an underdrain and discharged to a sewer pipe or daylighted. Surface materials covered herein include pervious concrete, pervious asphalt, and pervious pavers.

Pervious pavement systems are designed to capture the Water Quality Volume (WQV) and infiltrate that volume over a minimum of 24 hours (48 hours maximum). However, they can be modified to provide both water quality control and peak flow control with the appropriate overflow measures in place.

BMP Components

Pavement Surface – The pavement surface is a pervious wearing course with durability and strength to withstand the appropriate traffic loadings. The various pavement surfaces included in these design guidelines include pervious concrete, pervious asphalt, and pervious pavers.

Pervious concrete has fewer fines than traditional Portland cement concrete and relies on the cementious paste to bond the larger aggregate. Voids left by the absence of fines allow water to pass through.

Pervious asphalt has fewer fines than traditional asphaltic concrete mixes and relies on the asphalt binder to bond the larger aggregate. Voids left by the absence of fines allow water to pass through.

Pervious pavers, also known as Permeable Interlocking Concrete Pavement (PICP), are traditional pavers formed and laid with gaps that are filled with an open-graded aggregate that provides void structure that allows water to pass through the layer. Paver thickness may vary between manufacturers but is typically 3 1/8 inches thick for vehicular traffic use. Pervious pavers are set on a leveling course or bedding of material similar to that used for filling the gap between pavers. The material is often AASHTO No. 8, 89, or 9 stone.

Aggregate Base Course – The base course layer of aggregate provides structural support and a suitable surface for laying pervious concrete and pervious asphalt on. It should be a clean washed, uniformly graded, free-draining aggregate and can be used for the full thickness of the reservoir. The base course should also be of a gradation that will not fill voids in the underlying subbase course if used. The recommended base course is typically an AASHTO No. 57 stone.

Separation Fabric, Filter Course, and Geogrid – Non-woven geotextile fabric or an appropriate sized filter stone course should be used to keep fines from entering the pervious pavement system. They also help keep the base layer aggregate from being pushed into the subgrade when the soil becomes saturated and the pavement is loaded. Geogrid is also recommended on low California Bearing Ratio (CBR) soils, such as saturated clays and silt, to help distribute loads.

Pervious Pavement

Soils – The types of soils on site will partially determine how much water will be infiltrated. Additionally, the wetting and saturation of expansive or collapsible soils will require special considerations. Refer to the project geotechnical report and the United States Department of Agriculture (USDA) Natural Resources Conservation Service (NRCS) Soil Survey for the project area to help determine project soil characteristics for design.

Depth – The depths of the individual surface and aggregate layers vary depending on the selected material for the surface course and loads. However, the minimum total depth is a function of frost depth. It also depends on the volume of storage needed, soil properties, and available space. Shallow groundwater or bedrock can also limit it.

Underdrain – An underdrain positioned at the bottom of the base course allows for water to drain out of the basin. The underdrain pipe is typically a section of slot perforated PVC pipe lying horizontally at the bottom of the chamber surrounded by a 6-inch layer of 1 ½-inch drainage aggregate. The slot perforated PVC pipe should connect to an adjustable valve, any riser pipe needed to access the valve, and solid PVC pipe that discharges to a sewer pipe or is daylighted. A cleanout should be provided on the upgradient end of the perforated pipe section. Underdrain pipes should be 6-inch diameter minimum.

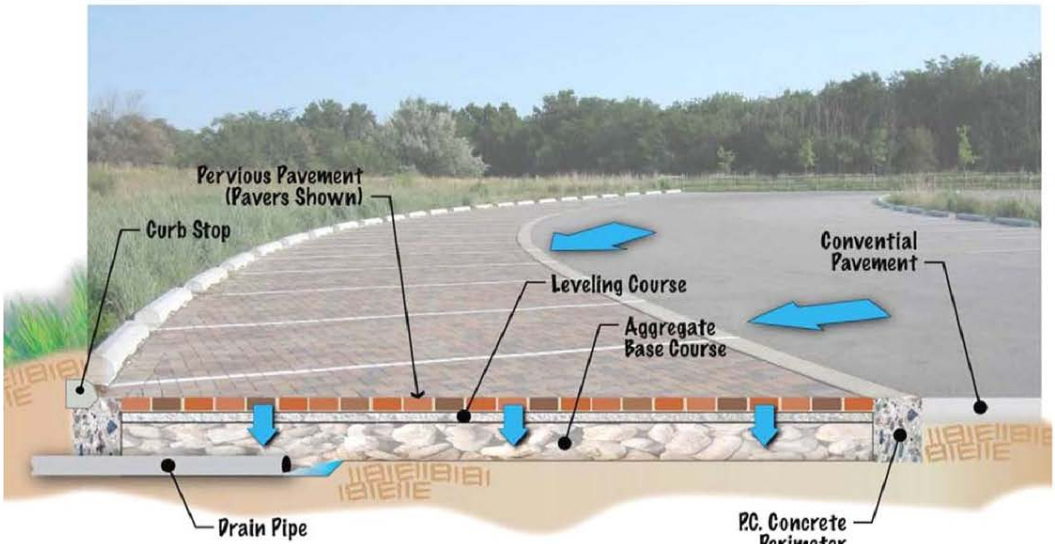

Pervious Pavement Example
Not to Scale

Pervious Pavement

DESIGN CONSIDERATIONS

Questions to ask yourself…

Q. Are site and traffic conditions suitable for pervious pavement?

Q. What types of soils are on site and are they compacted?

Q. What impact will infiltration have on adjacent pavement, buildings, water bodies, groundwater, etc.?

Q. How does the proposed pervious pavement system interact with other design storm considerations?

Because of the higher cost of the pervious pavement system, placement is generally limited to sites with physical constraints where space is an issue and/or where the cost of land is an issue.

Pervious pavement systems are better suited to sites with lower traffic volumes and speeds. Loads may also be a factor, and systems may need to be modified from the recommended minimum design criteria to account for higher loadings and traffic volumes. Pervious pavement systems are generally limited to parking stalls, drives, trails, and roadway shoulders. Pavers should be laid in a herringbone pattern to help distribute the loads more effectively.

A perimeter barrier (typically made of Portland cement concrete – 6 inches wide minimum with a depth that extends to the bottom of the base aggregate course) is required for pervious pavers and recommended for pervious asphalt. When pervious pavement abuts traditional pavement either a concrete perimeter barrier or an impermeable geomembrane liner shall be used to reduce the risk of saturating adjacent subgrade soils.

Site topography should be considered in design and is best suited where the topography of the site allows for placement on the contour or flat area. Pervious pavement systems require a level bottom when infiltration is suitable. On slopes greater than 1 percent, transverse barriers should be used to provide the necessary storage in aggregate reservoirs in stepped sections. Transverse barriers may be constructed using concrete or a 30 mil PVC geomembrane. The top of the transverse barrier should be positioned several inches below the pervious pavement section.

The underdrain system should be designed for a 24-hour drawdown time and include a valve to help control discharge rates. Cleanouts should also be provided.

When expansive soils are encountered, an impermeable liner will likely be necessary to reduce risks to the pavement surface course. When collapsible soils are encountered, an impermeable liner is an option, as well as the excavation and recompaction of upper subgrade soils. Consult the geotechnical engineer for further recommendations and design guidance if these materials are encountered.

Pervious pavement systems designed for infiltration are susceptible to leaching pollutants into sensitive waters or saturating soils adjacent to infrastructure. The designer should reference design criteria for setback distances.

Pervious Pavement

The bottom of the pervious pavement system should be level when infiltration is desired and at least 4 feet above the seasonal high groundwater table. If a water table is not present, then the bottom of the aggregate course should be at least 4 feet above bedrock or other barrier layer.

Pervious pavement systems may be modified to include additional storage for peak flow reduction with an appropriate outlet structure that allows the release of the Water Quality Volume (WQV) at prescribed rates and overflow for larger storm events.

Pervious pavement systems should be designed to safely convey larger storm events whether the system is designed offline or online or becomes plugged. The collection and/or conveyance of larger storm events will need to be incorporated into the overall design.

Pervious Pavement

DESIGN CRITERIA

Description	Value
Maximum Contributing Basin Area	5 acres
Contributing Basin Area to Pervious Pavement Surface Area Ratio	3:1 to 5:1 (typical)
Surface Depth (typical for conditions provided in text – use engineering judgment)	Pervious Concrete – 6 inches Pervious Asphalt – 5 inches Pervious Pavers – 3 1/8 inches (+ 1 inch bedding minimum for pavers)
Base Course Depth	12 inches minimum (even with filter course)
Filter Course Depth (Optional)	6 inches typical
Minimum Total Depth	24 inches (2/3 minimum frost depth typical)
Minimum Infiltration Rate	0.5 inch/hour
Maximum Infiltration Rate	12 inches/hour
Water Quality Volume (WQV)	Reference Chapter 3 of NDOR's *Drainage Design and Erosion Control Manual*
Aggregate Porosity	0.30 Base Course Aggregate 0.25 Filter Course Aggregate (Geotechnical engineer will need to approve anything greater)
Time for Infiltration	24 hours (48 hours maximum)
Setback Distances	Surface Water – 50 feet Private Drinking Water Wells – 100 feet Public Drinking Water Supply Wells (Non-Community System) – 100 feet Public Drinking Water Supply Wells (Community System) – 500 feet Water Lines (Pressure) – 25 feet Water Lines (Suction) – 100 feet Property Lines – 5 feet Foundations (NDOR)* – 20 feet (assumes no basement) Foundations (Neighbors)* – 30 feet (assumes no basement)

* Add 10 feet to setback distance when foundations are lower in elevation than water quality feature or adjacent to a full depth basement

Pervious Pavement

DESIGN PROCEDURE

Step 1: Calculate Water Quality Volume (WQV)

Calculate WQV as defined in Chapter 3 of NDOR's *Drainage Design and Erosion Control Manual* **OR** use Exhibit 3.5 - Water Quality Volumes and Peak Discharges for Selected Acreages for sites less than 5 acres.

Step 2: Determine the minimum depth of the pervious pavement system

To determine the minimum total depth, add the minimum reservoir depth (base aggregate and, if used, the filter course) to the pervious pavement thickness (and bedding if pavers are used) and check the total against minimum design criteria based on frost depth. Make sure all minimum criteria are met.

To determine the minimum volume of the reservoir, divide the WQV by the available pore space:

$$V_R = WQV/n$$

V_R = pervious pavement reservoir volume (ft^3)

n = aggregate porosity
(assume 0.30 initially or obtain from project geotechnical report – actual depth should be based on composite "n")

The minimum bottom surface area depends on the infiltration rate of the soil and drain time allowed.

$$A = \frac{WQV * (12\ in/ft)}{I * t}$$

A = bottom surface area (ft^2)

I = infiltration rate of underlying soil (in/hr)
(obtain from field or laboratory testing)

t = time to drain (24 hours)

The minimum reservoir depth is determined by dividing the reservoir volume by the bottom surface area.

$$D_R = V_R/A$$

D_R = minimum depth of reservoir
(calculated depth or frost depth, whichever is greater)

Add the type of pervious pavement surface and any bedding layer to the minimum reservoir depth to get the total minimum depth. Check minimum total depth calculated against minimum depth criteria based on frost depth provided in the design criteria table (use the greater depth).

Step 3: For underdrain systems, size the valve for WQV drawdown

Use the average discharge rate and average hydraulic head to calculate the orifice size for the Minimum WQV Drawdown Time provided in the design criteria table. Round the calculated orifice size up to the nearest standard valve size and include it in the design.

Find the average discharge rate:

$$Q = WQV/t/3600$$

Q = average orifice discharge rate (cfs)

t = WQV drawdown time (hours)

Find the orifice area:

$$A = Q/[C*(2*g*h)^{0.5}]$$

A = orifice area (ft^2)

C = orifice discharge coefficient, dimensionless (0.60 typ)

g = acceleration of gravity (ft/s^2)

h = average hydraulic head (ft)
(height measured from orifice invert to midpoint of extended detention depth – assumes orifice is small relative to total height)

Find the orifice diameter:

$$d = (4*A/3.14)^{0.5}*12$$

d = orifice diameter (in)

Round the calculated orifice size up to the nearest standard valve size.

Step 4: Check diversion or storage and routing of larger storm events

Reference Chapter 1 of NDOR's *Drainage Design and Erosion Control Manual* to check the routing of larger design storm events.

Design offline pervious pavement systems to divert runoff greater than the Water Quality Volume Discharge Rate (Q_{WQ}) away from the system. Design online pervious pavements systems for the WQV and integrate any additional storage into the feature. Additional storage to reduce peak runoff will be added above the WQV and controlled through a multistage outlet structure.

NDOR recommends the use of the NRCS TR-55 procedure (See Chapter 1) to determine the runoff volume and discharge rate typically used to design a detention system for a project site. The (Modified) Rational Method will not be acceptable.

Pervious Pavement

DESIGN EXAMPLES

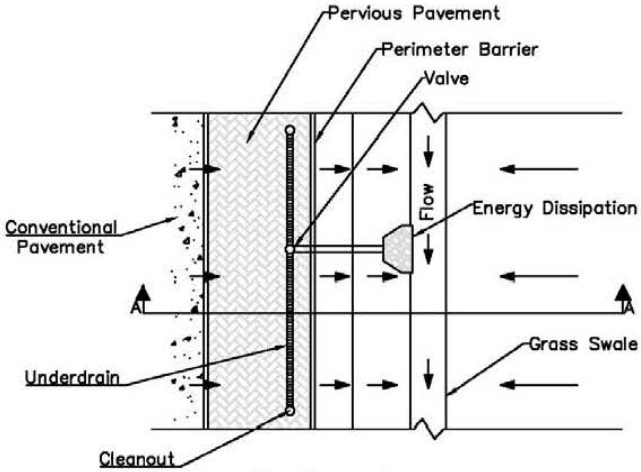

Pervious Pavement
Plan View
No Scale

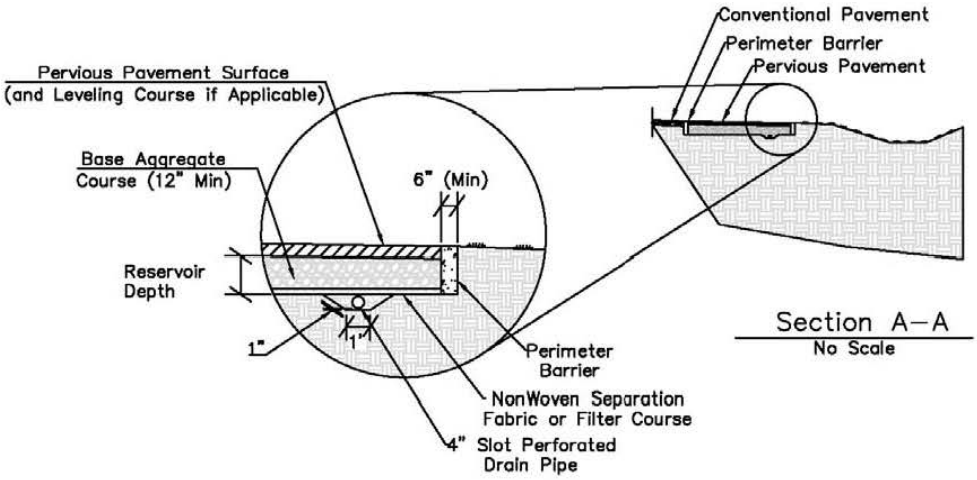

Section A–A
No Scale

Drain Pipe and
Perimeter Barrier
No Scale

Pervious Pavement

CONSTRUCTION CONSIDERATIONS

- Consider in advance the construction sequencing and erosion and sediment control practices during site construction because pervious pavement systems are prone to failure when inundated with a high sediment load.
- Stabilize the upgradient contributing drainage area before putting the pervious pavement systems into operation.
- If it is not possible to stabilize upgradient before construction and flow cannot be temporarily bypassed, provide erosion and sediment control protection for the pervious pavement system or cover with a tarp or other impermeable cover.
- As with conventional pavement systems, uniformity of subgrade support is important for pervious pavement systems. Proof-roll or check the pavement subgrade in some other manner for uniformity. If subgrade soils are not suitable for infiltration, then compact and rework subgrade soils if necessary.
- If subgrade soils are suitable for infiltration, then protect subgrade soils from compaction. Avoid using heavy equipment in the basin bottom during excavation of the pervious pavement system to maintain the infiltration rate.
- Excavate the bottom and sides in such a manner as to leave the soil in a natural, unsmeared, and uncompacted condition.
- If infiltration areas do get compacted during construction, additional infiltration testing may be required.
- Compact aggregate courses and, ideally flush them with water, to seat the aggregates before placing the pavement surface.
- Protect pervious pavement system from construction or other traffic during the course of construction and after construction where practical. If this is not possible, take steps to reduce loads, compaction, tracking of mud and debris, and deposition of sediments.
- Follow industry standards for the appropriate mixing, transport, placement and consolidation, jointing, finishing, and curing of the various pavement surfaces. Follow weather restrictions for the construction of the pervious pavement system.
- Appropriately train an adequate number of construction team members for specified pavement surface construction. Typically, this number would be at least one out of four crew members.
- Conduct a pre-paving conference with the construction team, design team, and NDOR representatives before beginning construction.
- Test panels or sections are recommended 30 days before construction for the various pervious pavement systems.

Pervious Pavement

MAINTENANCE AND INSPECTION REQUIREMENTS

The maintenance objectives for pervious pavement systems include maintaining infiltration rates and storage capacity of the surface pavement, underlying aggregates, and subsoils. Outlet structures should also be inspected and maintained, along with vegetation in the contributing basin.

Frequency	Inspection and Maintenance Activity
After Construction (While NPDES Permit is Open)	• Inspect pervious pavement system bi-weekly and after any major rainfall event (≥ ½ inch) for any surface ponding or indicators that water has ponded for an extended period of time. • Check observation wells 3 days (72 hours) after a major rainfall event (≥ ½ inch) to ensure proper drain time. • Inspect pervious pavement system bi-weekly for sediment buildup on the pavement surface and any outlets. Remove sediment as needed. • Remove trash and debris from the trench and any diversion structures, outlets, and forebays. • Inspect and maintain vegetated areas.
Quarterly (Through First Two Years From End of Construction)	• Inspect pervious pavement system for any surface ponding or indicators that water has ponded for an extended period of time. • Check observation wells 3 days (72 hours) after a major rainfall event (≥ ½ inch) to ensure proper drain time. • Inspect pervious pavement system for sediment buildup on the trench surface. Remove sediment as needed. • Inspect the trench and any diversion structures, outlets, and forebays for trash and debris, erosion, sediment buildup, and structural damage. Repair as needed. Inspect and maintain pretreatment stormwater BMPs in accordance with their respective design guidelines.

Pervious Pavement

Frequency	Inspection and Maintenance Activity
Annually (After First Two Years From End of Construction)	• Inspect pervious pavement system for any surface ponding or indicators that water has ponded for an extended period of time. • Check observation wells 3 days (72 hours) after a major rainfall event (≥ ½ inch) to ensure proper drain time. • Inspect pervious pavement system for sediment buildup on the trench surface. Remove sediment as needed. • Inspect the pervious pavement system and any diversion structures, outlets, and forebays for trash and debris, erosion, sediment buildup, and structural damage. Repair as needed. • Inspect and maintain pretreatment stormwater BMPs in accordance with their respective design guidelines.
At Failure	• Analyze, redesign, and reconstruct.

RESOURCES AND REFERENCES

Atlanta Regional Commission. *Georgia Stormwater Management Manual – Volume 2: Technical Handbook*. August 2001.

Interlocking Concrete Pavement Institute (ICPI). Permeable Interlocking Pavement (PICP) For Design Professionals Fact Sheet. Retrieved from http://www.icpi.org/sites/default/files/picp_fact_sheet_dp-april_2012.pdf on June 16, 2012.

Iowa State University – Institute for Transportation. *Iowa Stormwater Management Manual*. October 2009.

National Ready Mixed Concrete Association (NRMCA). *Pervious Pavement Construction*. Retrieved from http://www.perviouspavement.org/construction.html on June 16, 2012.

National Ready Mixed Concrete Association (NRMCA). *Pervious Pavement Design*. Retrieved from http://www.perviouspavement.org/construction.html on June 16, 2012.

Nebraska Department of Environmental Quality. *Title 124 - Rules and Regulations for the Design, Operation and Maintenance of Onsite Wastewater Treatment Systems*. December 2007.

Nebraska Department of Roads. *Drainage Design and Erosion Control Manual*. August 2006.

State of New Jersey. *New Jersey Stormwater Best Management Practice Manual*. March 2003.

StormwaterPA. *Pennsylvania Stormwater Best Management Practices Manual*. December 2006.

Truckee Meadows Regional Storm Water Quality Management Program. *Structural Controls Design Manual*. April 2007.

United States Environmental Protection Agency. *National Pollutant Discharge Elimination System (NPDES) Menu of BMPs*. Last Updated January 2008.

Urban Drainage and Flood Control District. *Urban Storm Drainage Criteria Manual Volume 3*. 2010.

Virginia Department of Conservation and Recreation (DCR). *Stormwater Design Specification No. 7 – Permeable Pavement*. March 2011.

Proprietary Structural Treatment Controls

OVERVIEW

Source: CDS® Hydrodynamic Separator from Contech Website (Not an Endorsement)

Definition

Proprietary Structural Treatment Controls are structural stormwater treatment systems manufactured by private companies. They are often prefabricated units designed and sized based on criteria determined by the manufacturer for a given treatment volume or flow rate. The types of pollutants and removal efficiencies vary with each system.

Benefits

- Suitable for highly urbanized areas and areas with direct runoff from impervious surface such as parking lots or roadways.
- Can fit in limited space and be located underground and under pavement.
- Often suitable in areas where infiltration practices and groundwater contamination are a concern.

Overview Table

Associated Costs	L	M	H
Design		X	
Construction			X
Maintenance		X	X
Pollutant Removal	**L**	**M**	**H**
Suspended Solids	X	X	X
Nutrients	X	X	X
Heavy Metals		X	
Hydrocarbons		X	

Limitations

- Typically designed for treatment of smaller drainage areas.
- Can be cost prohibitive.
- Requires reliance on manufacturer's claims for treatment efficiency if not third-party verified and field tested.
- May present possible odor problems.
- Consider floatation of the structure in areas with high groundwater.
- May have special maintenance needs.

Proprietary Structural Treatment Controls

BEST MANAGEMENT PRACTICE (BMP) DESCRIPTION

Proprietary structural treatment controls (PSTC) are commercially available stormwater treatment systems. They come in many sizes to treat a range of stormwater flow rates or volumes provided by the designer. These systems treat stormwater in various ways with mechanisms ranging from gravity and vortex separation of solids to filtration with catch basin inserts. The structures may be fitted online or offline.

An overview of PSTCs is provided below. Products shown following the descriptions below are provided as examples. They are not an endorsement of the product, nor are they necessarily on the Nebraska Department of Roads (NDOR) Approved Products List. The designer should verify whether a product is on the NDOR Approved Products List before specifying its use.

BMP Categories

Hydrodynamic Separators (Figure A) – Hydrodynamic separators are flow-through structures that rely on vortex flow to assist in solids separation and gravity for deposition into a sedimentation chamber. Solids removed are often courser material due to limited retention times and indirect filtering methods. Designs often include the ability to separate oil and grease, floatables, and other debris with baffles and screens. Structures are placed underground.

Wet Vaults (Figure B) – Wet vaults are underground structures with multiple chambers that allow sedimentation to occur by gravity. The chambers are designed to hold a "permanent" pool of water but may also be designed to retain the water quality storm for an extended period to allow for sedimentation. The structures are often fitted with weirs and baffles to reduce energy and sediment re-suspension and to trap oil, grease, and floatable debris.

Catch Basin Inserts (Figure C) – Catch basin inserts are filters designed to fit inside a storm drain inlet. Catch basin inserts often take the form of a basket, a system of trays, or filter socks. Baskets may simply be used to collect gross solids or can be lined with an absorbent or a filter, Tray type systems are inserts with multiple layers of various absorbent or filtration media to remove the desired pollutant, and socks are generally a fabric filter in the form of a sock that is inserted in an inlet to trap pollutants. Some inserts allow for overflow bypass while others may not. Some inserts may be vacuumed out or removed and cleaned out while others may need complete replacement of the insert or treatment media.

Media Filtration Systems (Figure D) – Media filtration systems are manufactured units that often contain a pretreatment settling chamber and a chamber with filtration or absorbent media, typically in the form of a cartridge. They can be designed with storage to retain the water quality storm for an extended period to assist with sedimentation during pretreatment. The filtration or absorbent media cartridge is replaced as needed. Overflow bypass is typically provided.

Landscape Filtration Systems (see Figure E) – Landscape filtration systems are manufactured units that allow stormwater to filter through landscape vegetation or turf and infiltrate through a growing media, typically a sand and compost mix. Pretreatment may be built into the system to reduce gross solids and coarse sediment. Overflow bypass is typically provided in these systems.

Proprietary Structural Treatment Controls

Figure 1. Hydrodynamic Separator

Source: Vortechs® System

Figure 2. Wet Vaults

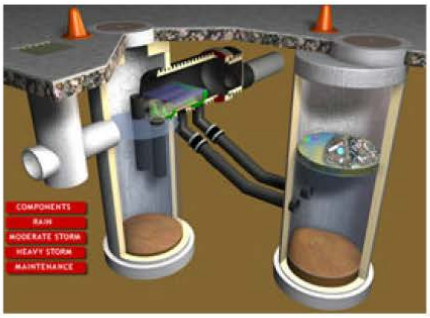

Source: Bay Separator® System

Figure 3. Catch Basin Inserts

Source: Triton® Catch Basin Inserts

Figure 4. Media Filtration Systems

Source: StormFilter® System

Figure 5. Landscape Filtration Systems

Source: Filterra® System

Proprietary Structural Treatment Controls

DESIGN CONSIDERATIONS

PSTCs typically require minimal space and are well suited for dense urban environments. Each manufactured system is different. The designer should verify space requirements for the system, including any additional space needed for pretreatment or bypass.

The designer should consider the types of pollutants PSTCs will remove and match the type of structure with the intended purpose as much as possible.

Questions to ask yourself…

Q. What are the site constraints?

Q. What types of pollutants are you trying to remove?

Q. How effective is the structure at removing pollutants?

Q. How does the proposed treatment control interact with larger storm events?

Q. Is the proprietary structural treatment control designed for ease of maintenance?

There may be limitations to the level of treatment because of the removal mechanisms involved, the product's size, limitations to the time for removal or sedimentation, etc. The designer should be aware of those limitations.

The treatment system must have demonstrated capability of meeting stormwater goals for its intended use. The manufacturer needs to provide independent third-party scientific verification of the treatment system's performance. The manufacturer should also demonstrate effectiveness of the treatment system with testing in the field, specifically testing the structure in climates similar to Nebraska's and for uses similar to the ones you expect on your project.

Hydraulic grade lines should be checked to make sure there is enough head to allow for the treatment system to function properly and not cause backup. Consideration should be given to how the treatment system functions during a larger storm event. The treatment system should allow for bypass of larger storm events with minimal resuspension or remobilization of pollutants.

The designer needs to review the maintenance of structural treatment controls, and maintenance personnel need to be aware of what may be involved. Maintenance may include vacuuming out a sedimentation reservoir or filter basket, or replacing a filter media or filter media cartridge. Manufacturer's recommendations on maintenance should be followed. More frequent inspections occur the first year of operation (perhaps quarterly) to gauge the amount of pollutants trapped. Inspection frequency and maintenance could be adjusted after the first year to more suitably meet site conditions.

RESOURCES AND REFERENCES

Atlanta Regional Commission. *Georgia Stormwater Management Manual – Volume 2: Technical Handbook*. August 2001.

California Department of Transportation. *Storm Water Quality Handbook – Project Planning and Design Guide*. July 2010.

Iowa State University – Institute for Transportation. *Iowa Stormwater Management Manual*. October 2009.

Nebraska Department of Roads. *Drainage Design and Erosion Control Manual*. August 2006.

State of New Jersey. *New Jersey Stormwater Best Management Practice Manual*. March 2003.

Truckee Meadows Regional Storm Water Quality Management Program. *Structural Controls Design Manual*. April 2007.

Urban Drainage and Flood Control District. *Urban Storm Drainage Criteria Manual Volume 3*. 2010.

Forebays

OVERVIEW

Source: Lincoln, NE 56th and Pine Lake

Definition

A sediment forebay is a pretreatment BMP. It is a settling basin that allows sediment to drop out of stormwater runoff before entering another basin: extended dry detention basins, wet detention basin, and stormwater wetlands.

Benefits

- Helps dissipate energy and reduce velocity from outlet discharge.
- Reduces accumulation of sediment in detention basins and improves water quality.
- Limits the area of heavy sedimentation so it can be maintained more effectively.

Overview Table

Associated Costs	L	M	H
Design	X		
Construction	X		
Maintenance		X	
Pollutant Removal	**L**	**M**	**H**
Suspended Solids		X	
Nutrients	X		
Heavy Metals		X	
Hydrocarbons	X		

Limitations

- Site topography may dictate size and shape.
- Design requirements may increase with larger basins and/or higher embankments.
- Mosquito and algae problems may develop in wet forebays.
- Typically removes coarser sediment particles.

Forebays

BEST MANAGEMENT PRACTICE (BMP) DESCRIPTION

Forebays are traditionally used to help dissipate energy and allow sedimentation to occur before stormwater enters the retention basin. Forebays accept runoff from pipes, swales, or sheet flow. They can take any shape but are typically designed to fit the topography and should have a minimum length to width ratio of 2:1. Forebays may be lined with turf reinforcement mats (TRMs), transition mats, riprap, concrete, or a combination thereof to help spread flows, dissipate energy and reduce the potential for end-of-pipe erosion. They should be designed online to decrease sedimentation in the larger downstream basin.

The volume of the forebay will vary based on the Water Quality Volume (WQV) and anticipated depth of the forebay. The forebay will need to have the sediment removed when 50% of the capacity is lost. The forebay should be examined annually (through the use of a vertical sediment depth marker) after the spring melt to see if sediment removal is needed and will vary depending on the composition of the contributing drainage area.

BMP Components

Stone Weeper Weir– A forebay outlet structure comprised of a stone weir that allows water to pass over it during large storm events and seep through it to drain the basin down after the storm has passed and during small storm events. Stone weeper weirs are utilized to maintain a dry forebay with the extended dry detention basin design.

> ***Effective Weir Length (L')*** —The length of the weir (ft), perpendicular to flow, that water can pass over.
>
> ***Riprap Length (L)*** —The total length of riprap (ft), measured perpendicular to the direction of flow, that includes the weir length and extends past it to tie into the earthen embankment.
>
> ***Weir Height (H)*** - The height of the weir (ft) will be designed to pass 10-20% of WQV (depending on forebay depth selected).
>
> ***Weir Breadth (W)*** - The width of the weir (ft), measured parallel to flow, that water passes over.

Riprap Seepage Cover and Embankment – Forebays for wet detention and stormwater wetlands should have an earthen embankment with 2 ft of rock riprap cover constructed just below the permanent pool elevation to form the forebay back side. The riprap seepage cover helps prevent erosion and allows flow through when the water surface elevation falls below the permanent pool elevation.

Energy Dissipation - Energy dissipation is required if the discharge velocity exceeds 15 fps, and should be evaluated on a case-by-case basis for any discharge greater than 8 fps. Riprap aprons are intended to reduce velocities and dissipate energy at pipe outlets. Minimum forebay dimensions are based on minimum requirements for sizing riprap aprons whether they are needed or not.

Total Depth – The total depth of the forebay is measured from the top of the embankment to the bottom of the forebay basin.

Forebays

DESIGN CONSIDERATIONS

Site characteristics are important when designing a forebay and should be taken into consideration early in the design process.

Check available right-of-way when determining the footprint. Consider the ramifications of standing water adjacent to the roadway and any safety considerations, such as locating the forebay outside clear recovery zones and whether fencing is needed.

Questions to ask yourself…

Q. How much area is available and will 10%, 15%, or 20% of WQV be treated?

Q. Does the discharge velocity exceed 8 fps?

Q. How deep is the forebay, and will it need an aquatic bench or an embankment higher than 6 ft?

The volume of the forebay varies based on the WQV. The forebay should be sized to contain a minimum of 10% of the WQV with a standard minimum depth of 2 ft. However, if a larger area is available for the forebay and a smaller minimum depth is selected (1.5 or 1 ft) then 15% or 20% of the respective WQV will be the design volume for the forebay. This forebay storage volume is part of the total WQV and can be subtracted from the WQV for permanent pool sizing.

Regardless of whether energy dissipation is needed or not, the minimum length and width of the forebay will be sized using equations for riprap apron sizing. While the minimum depth will vary based on volume of water delivered and the WQV percentage treated, forebays should not exceed 4 feet in depth or will require an aquatic bench if maximum depth is exceeded. Forebays should be constructed with side slopes no steeper than 3H:1V.

The Nebraska Department of Natural Resources (NDNR) has jurisdiction over “dams” as defined in Chapter 46, Article 16: Safety of Dams and Reservoirs and Title 458, Nebraska Administrative Code, Chapters 1-13; NDNR Rules for the Safety of Dams and Reservoirs. Verify whether or not your project falls within NDNR jurisdiction and may need to meet NDNR dam design standards; particularly for embankments 6 feet high or greater and those with an impounding capacity at maximum storage elevation greater than 15 acre-feet.

Site topography dictates whether an embankment can be constructed to meet the storage need or whether excavation is necessary. Stone Weeper weirs should be utilized for an outlet for extended dry detention forebays. The slopes of stone weeper weirs should not be steeper than 3H:1V and should be underlain with geotextile fabric. Additionally, the stone weeper should have a 10 ft minimum breadth of weir (4’ top of berm), and be constructed with a 2 ft layer of 1” washed stone over a layer of rock riprap (Type A typical). The weir section should be able to withstand shear stresses from 10 year return period design storms. Riprap should be provided on the downstream side of the stone weeper weir to provide erosion control as well and should be constructed as a channel down the backslope.

Wet forebays will have a riprap seepage cover (min 2 ft deep) on an earthen embankment. The minimum top of embankment width is 4 ft.

The design criteria table provides standards that should be followed to the extent practical. The designer should refer to the design guideline specific to the selected BMP for additional information on function and design considerations.

Forebays

DESIGN CRITERIA

Description	Value
Water Quality Volume (WQV)	Reference Chapter 3 of NDOR's *Drainage Design and Erosion Control Manual*
Typical Forebay Length: Width Ratio	2:1 or as dictated by riprap apron area and topography
Minimum Forebay Length	Based on riprap apron length
Minimum Forebay Width	Based on riprap apron length
Maximum Forebay Depth	4 ft Forebays deeper than 4 ft require an aquatic bench which will increase sedimentation and prevent resuspension
Minimum Forebay Depth	10% WQV treated= 2 ft 15% WQV treated= 1.5 ft 20% WQV treated= 1 ft
Forebay Volume	10%-20% of WQV
Effective Weir Length (L')	Varies based on Contributing Drainage Area (see Table 2)
Riprap Length (L)	Varies based on L' (see Table 2)
Setback Distances	Same design considerations as BMP implemented

DESIGN PROCEDURE:

Even though a riprap apron is not required for velocities less than 8 fps, the size of a theoretical apron will still dictate the minimum size of the forebay. Follow the below calculations to size the forebay.

Size the Forebay through a Riprap Apron

Step 1: Calculate flow to BMP
Calculate the flow to the forebay for a 10-yr return period storm through using the Rational Method (NDOR Drainage and Erosion Control Manual- Chapter 1: Section 6).

Step 2: Determine Riprap Size (FHWA HEC 14)

This process assumes wet conditions with tailwater equaling 0.4D for wet conditions. This assumption should be used to design both wet and extended dry detention forebays.

$$D_{50} = 0.2D\left(\frac{Q}{\sqrt{g}D^{2.5}}\right)^{\frac{4}{3}}\left(\frac{D}{TW}\right)$$

D_{50}= riprap size (ft)
Q= design discharge (ft^3/s)
D= circular culvert diameter (ft)
TW= tailwater depth (ft) = 0.4D
g= acceleration due to gravity (32.2 ft/s^2)

Step 3: Use D_{50} to dictate riprap apron length and depth (FHWA HEC14).

The following table can be utilized to size the riprap apron's length and depth.

D_{50} (in)	Apron Length (L_A)	Apron Depth (D_A)
5	4D*	$3.5D_{50}$
6	4D	$3.3D_{50}$
10	5D	$2.4D_{50}$
14	6D	$2.2D_{50}$

*D is the culvert rise.

Note: if D_{50} exceeds 14" then adjust the outlet structure to reduce flow rate.

Step 4: Use D and L_A to determine the width at the end of the apron

This width should be calculated based on a 1:3 flare:

$$W_A = 3D + \frac{2}{3}L_A$$

Forebays

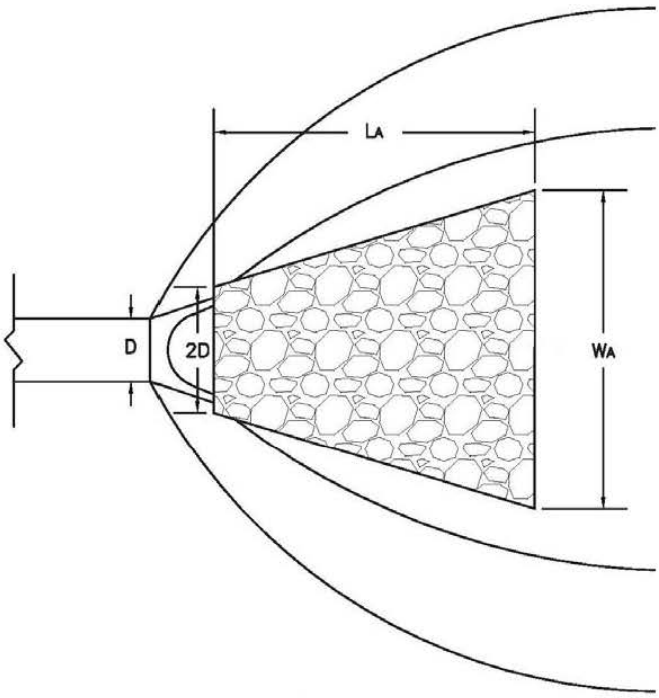

Riprap Apron
No Scale

Determine if Riprap Apron is Needed

Step 1: Calculate Discharge Velocity
If velocity of water leaving a discharge pipe is greater than 8 fps, then use a riprap apron or other energy dissipator in the forebay.

Requirements for Energy Dissipators	
Design Flow Outlet Velocity (fps)	Is an Energy Dissipator Required?
< 8	No
8-15	Evaluate on a case-by-case basis
> 15	Yes

From NDOR Drainage and Erosion Control Manual, Chapter 2

Step 2: Choose from available NDOR riprap sizes
If velocities exceed 8 fps, reference riprap apron sizing calculations (Size the Forebay: Step 2) and based on D_{50}, select a suitable riprap type available through NDOR.

NDOR RIPRAP PROPERTIES			
Riprap Type	Median Diameter D_{50} (in.)	Maximum Diameter D_{100} (in.)	Minimum Design Depth / Thickness (in)
Rock Riprap Type A	9	15	18
Rock Riprap Type B	12	19	21
Broken Concrete Riprap	13	23	24
Rock Riprap Type C	15	25	27

Design the forebay

Step 1: Decide minimum depth of Forebay on available area
If a minimum depth of 2 ft is chosen then 10% of WQV will be treated, whereas if 1.5 ft or 1 ft is selected then the corresponding WQV will be 15% or 20%, respectively.

Step 2: Calculate Water Quality Volume (WQV)
Calculate WQV as defined in Chapter 3 of NDOR's *Drainage Design and Erosion Control Manual*.

Step 3: Calculate forebay volume ($V_{forebay}$)

$V_{forebay}$= 10% × WQV (2 ft min depth)

$V_{forebay}$= 15% × WQV (1.5 ft min depth)

$V_{forebay}$= 20% × WQV (1 ft min depth)

Step 4: Verify Forebay Area

Calculate the area (A_{min}) needed for a 4 ft maximum depth in the forebay (D≤4 ft).

$$A_{min} = \frac{V_{forebay}}{D_{max}}$$

Compare this area to the necessary riprap apron area based on minimum dimensions. If A_{min} exceeds the riprap apron area, then the forebay must be designed according to A_{min} to prevent depths greater than 4 ft.

Step 5: Size the weir to carry anything larger than design WQV (10%, 15%, etc.)

Note: Wet forebays will have a riprap seepage cover over an earthen embankment, and it is not necessary to size the embankment for wet conditions.

The stone weeper weir can be designed with a determined water depth above the crest, and finding the effective weir length (L'), or by selecting an effective weir length and determining the water depth above the crest (h). Dry forebays will be designed with a minimum width of 4 ft at the top of the embankment. Corresponding discharge coefficients (C) for the minimum width with 1 ft of head (h) are typically 2.70.

Broad-crested weir: $Q = CL'h^{3/2}$

where:
C = dimensionless weir discharge coefficient (2.70 typical)
L' = effective weir length, ft
h = water depth above the crest, ft

After establishing the effective weir length, determine the corresponding riprap length.

Table 1. Table of weir (L') and corresponding minimum riprap (L) lengths.

Effective Weir Length (L')	*Riprap Length (L)*
4 ft	16 ft
5 ft	17 ft
6 ft	18 ft
10 ft	22 ft
12 ft	24 ft

DESIGN EXAMPLES

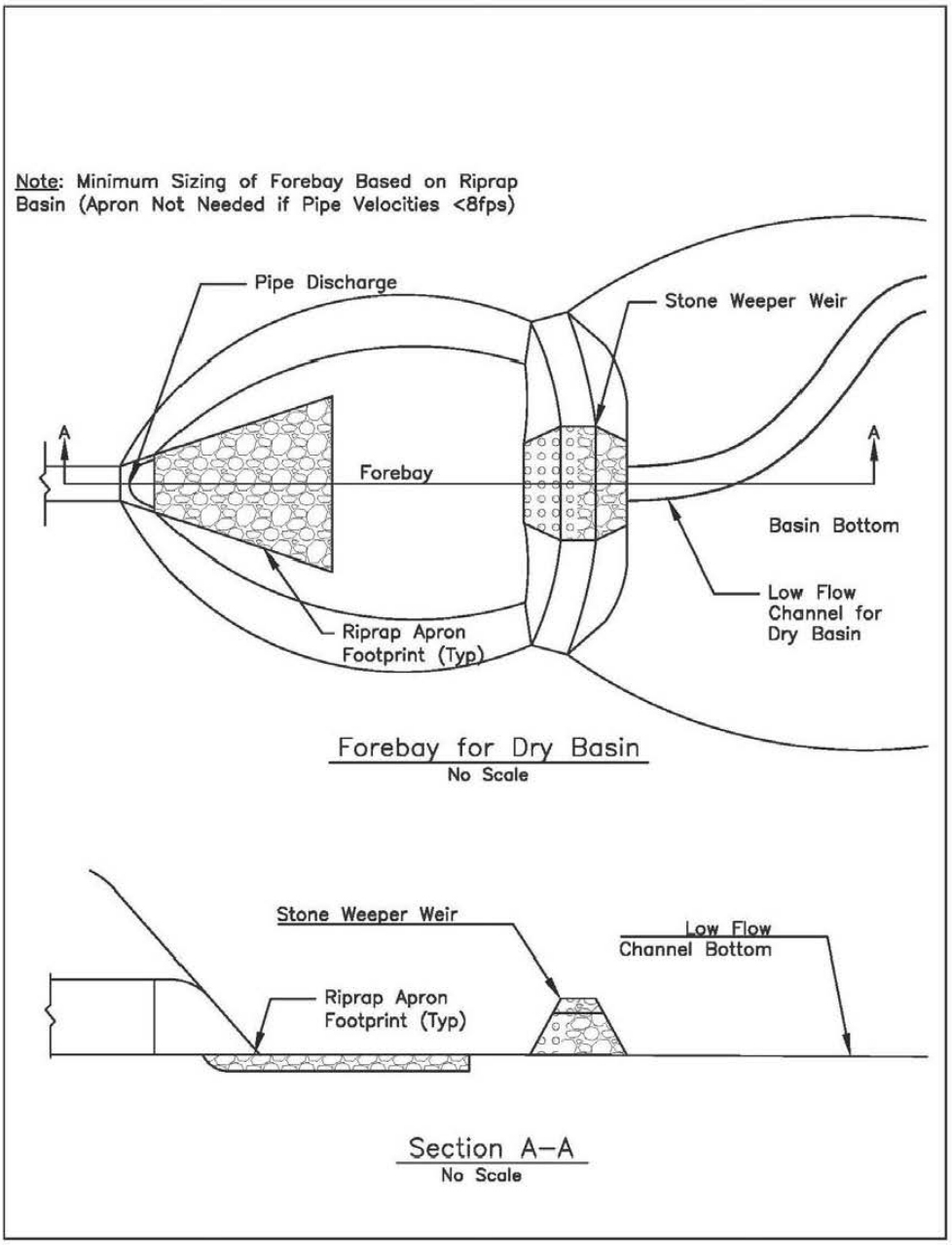

Forebay for Extended Dry Detention Basin

Forebays

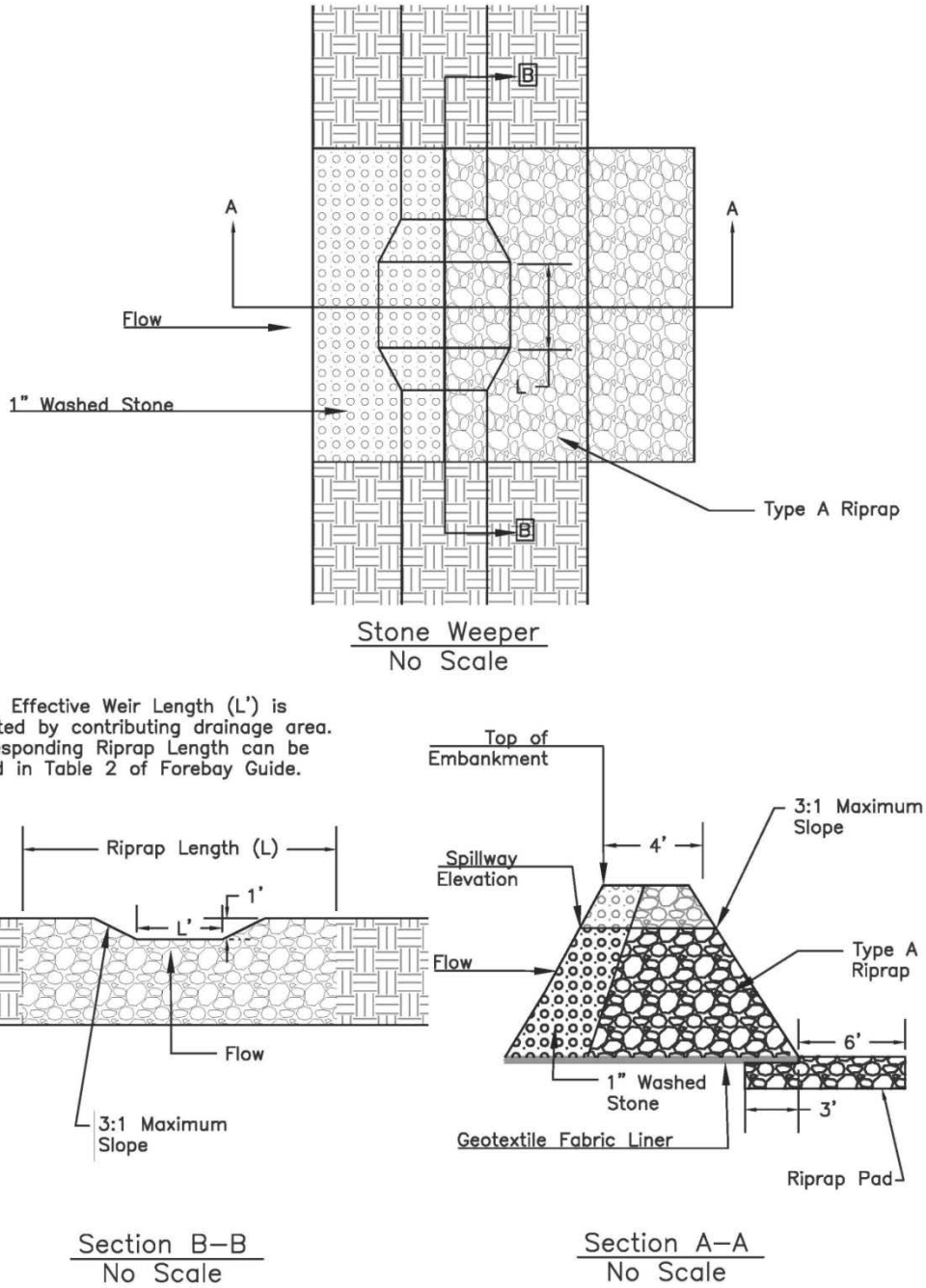

Stone Weeper Weir detail showing the composition of the weir structure, the effective weir length (L') and the riprap length (L).

Forebays

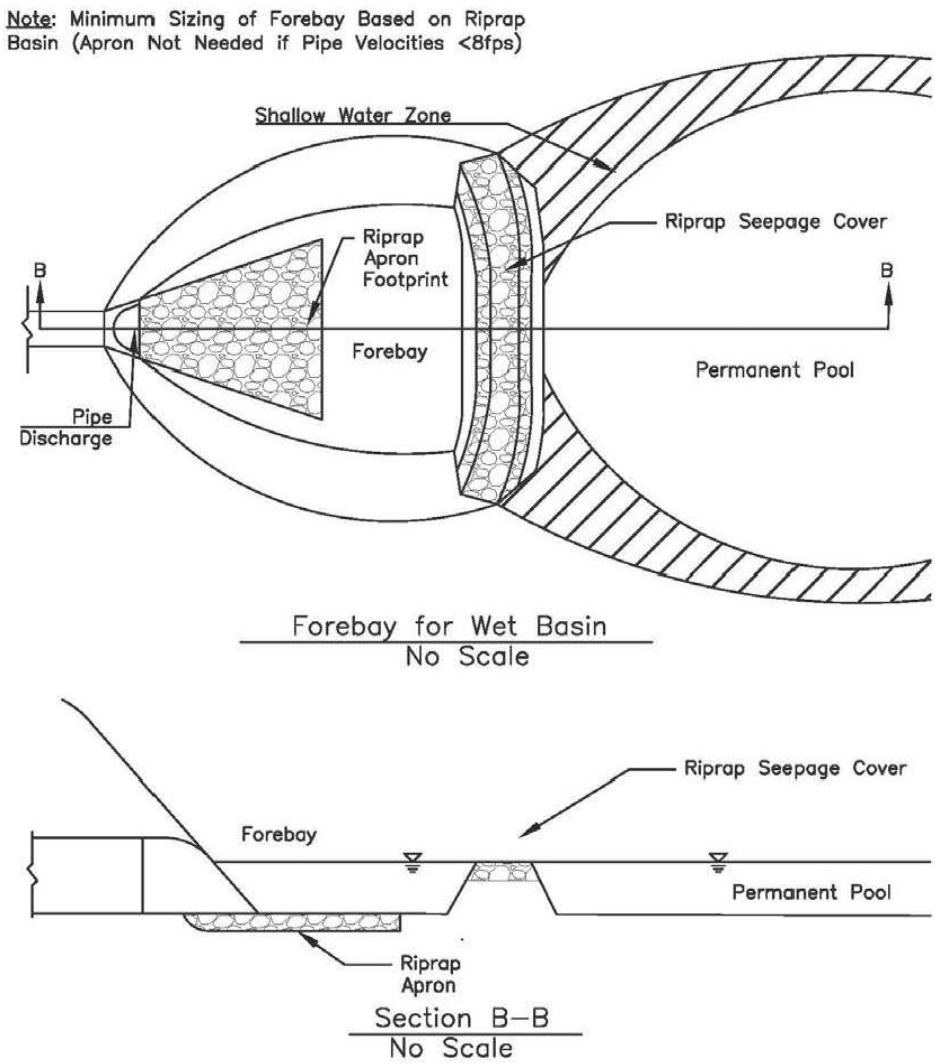

Forebay for Wet Detention Basin

Forebays

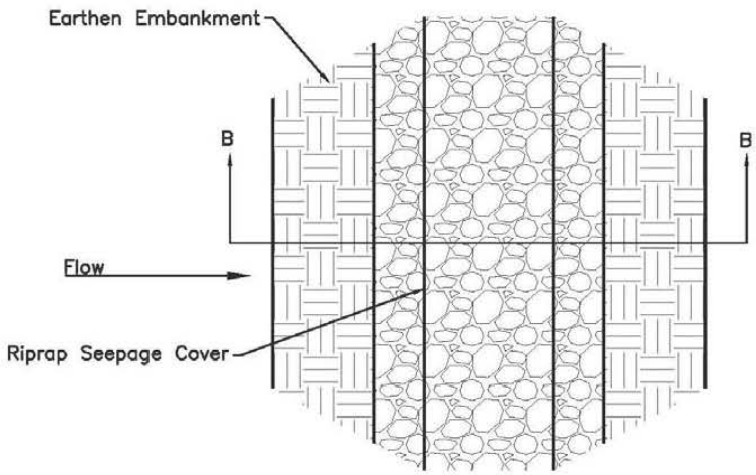

Embankment w/ Riprap
No Scale

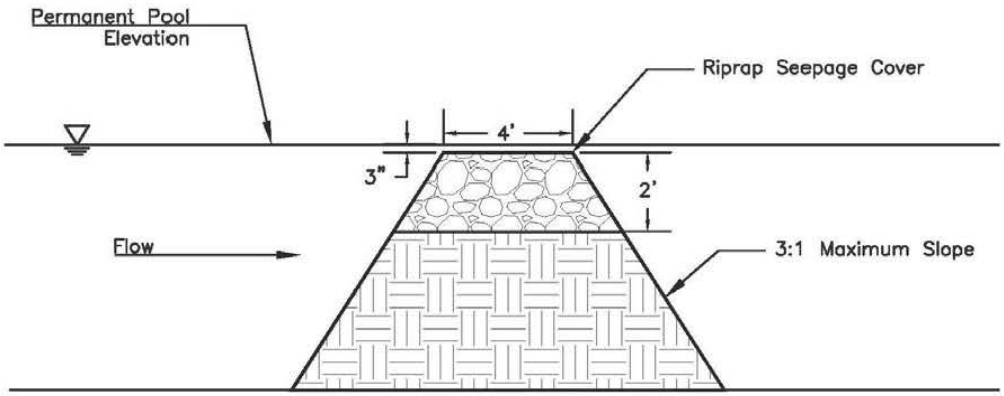

Section B–B
No Scale

Earthen Embankment with Riprap for Wet Detention Basin's forebays.

Forebays

CONSTRUCTION CONSIDERATIONS

- Consider in advance the construction sequencing and erosion and sediment control practices during site construction.
- Set up a water diversion to prevent flows to the forebay during forebay construction if it is not being used for sediment control during site construction.
- It may be possible to use the forebay as a sediment trap during construction. However, the sediment may have to be removed periodically during construction and again once the site has stabilized.
- The Stone Weeper weir should be installed after construction is completed to prevent early clogging. A temporary earthen berm section may take its place during construction.
- The riprap seepage cover should be installed after construction is completed to prevent early clogging.

MAINTENANCE AND INSPECTION REQUIREMENTS

The maintenance objectives for a forebay include providing litter control, monitoring erosion and sedimentation, and maintaining stone weeper weirs and riprap seepage covers. Maintenance activities specific to wet forebays will be **bold** and those specific to dry forebays will be *italicized*.

Frequency	Inspection and Maintenance Activity
After Construction (While NPDES Permit is Open)	• *Inspect forebay basin bi-weekly and after any major rainfall event (≥ ½ inch) for any unintended surface ponding or indicators that water has ponded for an extended period of time.* • *Check forebay basin 3 days (72 hours) after a major rainfall event (≥ ½ inch) to ensure drainage of the basin.* • **Inspect forebay for a water surface elevation that is consistently lower than design permanent pool elevation. If so, investigate to determine the cause (such as inflow, drought, or excessive seepage).** • Inspect forebay basin bi-weekly to ensure the intended vegetation is establishing well. Consider reseeding if needed. • Inspect forebay basin bi-weekly for erosion and any damage by equipment or vehicles after every major rainfall event (≥ ½ inch). Repair as needed. • Inspect forebay bi-weekly for sediment buildup in the basin or at outlet structures. Remove sediment when 50% of capacity is lost (approximately 5 years). • Remove trash and debris bi-weekly from the forebay and any inlets and outlets. • Inspect and maintain pretreatment stormwater BMPs in accordance with their respective design guidelines.
Semi-Annually (Through First Two Years From End of Construction)	• *Inspect forebay for any surface ponding or indicators that water has ponded for an extended period of time.* • *Semi-annually, check forebay 3 days (72 hours) after a major rainfall event (≥ ½ inch) to ensure drainage of the basin.* • **Inspect forebay for a water surface elevation that is consistently lower than design permanent pool elevation. If so, investigate to determine the cause (such as inflow, drought, or excessive seepage).** • Inspect forebay to ensure there is a dense, uniform stand of the intended vegetation. Consider reseeding if needed. • Remove and properly dispose of cuttings from the extended dry detention basin.

Forebays

Frequency	Inspection and Maintenance Activity

	• Mow grass to control weeds.
	  ○ Mow grass to a height not less than 6 inches.
	  ○ Do not let the weeds get over the 12-inch maximum height before mowing.
	• Inspect forebay for erosion and damage by equipment or vehicles. Repair as needed.
	• Inspect forebay for sediment buildup on the bottom of the basin. Remove sediment when 50% of capacity is lost (approximately 5 years).
	• Inspect the forebay, inlets, and stone weepers/riprap covered embankments for trash and debris, erosion, sediment buildup, and structural damage. Repair as needed.
	• Inspect and maintain pretreatment stormwater BMPs in accordance with their respective design guidelines.

Annually (After First Two Years From End of Construction)	• *Inspect forebay for any surface ponding or indicators that water has ponded for an extended period of time.*
	• *Annually, check forebay 3 days (72 hours) after a major rainfall event (≥ ½ inch) to ensure drainage of the basin.*
	• **Inspect wet detention basin for a water surface elevation that is consistently lower than design permanent pool elevation. If so, investigate to determine the cause (such as inflow, drought, or excessive seepage).**
	• Inspect forebay to ensure there is a dense, uniform stand of the intended vegetation. Consider reseeding if needed.
	• Mow grass to control weeds.
	  ○ Mow grass to a height not less than 6 inches.
	  ○ Do not let the weeds get over the 12-inch maximum height before mowing.
	  ○ Remove and properly dispose of cuttings from the infiltration basin.
	• Inspect forebay for erosion and damage by equipment or vehicles. Repair as needed.
	• Inspect forebay for sediment buildup on the bottom of the basin. Remove sediment when 50% of capacity is lost (approximately 5 years).
	• Inspect the forebay, inlets, and stone weepers/riprap covered embankments for trash and debris, erosion, sediment buildup, and structural damage. Repair as needed.
	• Inspect and maintain pretreatment stormwater BMPs in accordance with their respective design guidelines.

RESOURCES AND REFERENCES

Atlanta Regional Commission. *Georgia Stormwater Management Manual – Volume 2: Technical Handbook*. August 2001.

California Department of Transportation. *BMP Retrofit Pilot Program – Final Report*. January, 2004.

"Hydraulic Engineering Circular 14- "Energy Dissipators"" Federal Highway Administration, 1 Oct. 2012. Web.

Iowa State University – Institute for Transportation. *Iowa Stormwater Management Manual*. October 2009.

Maryland Department of the Environment. *Maryland Stormwater Design Manual*. 2009.

Minnesota Pollution Control Agency. *Protecting Water Quality in Urban Areas - Best Management Practices for Dealing with Storm Water Runoff from Urban, Suburban and Developing Areas of Minnesota*. March 2000.

Nebraska Department of Roads. "Drainage Design and Erosion Control Manual." N.p., 2006. Web.

New York State Department of Environmental Conservation. *New York State Stormwater Management Design Manual*. August 2010.

Olsson Associates. *Omaha Regional Stormwater Design Manual*. Rep. April 2006.

StormwaterPA. *Pennsylvania Stormwater Best Management Practices Manual*. December 2006.

Truckee Meadows Regional Storm Water Quality Management Program. *Structural Controls Design Manual*. April 2007.

Urban Drainage and Flood Control District. *Urban Storm Drainage Criteria Manual Vol 3*. 2010.

Principal Spillways

OVERVIEW

Source: Douglas County, Nebraska

Definition

The principal spillway is an outlet system that may have a number of orifice and weir combinations to control discharge rates from a collection basin.

Benefits

- Allows the WQV to be discharged in a controlled manner.
- Allows large storm events to pass in a controlled manner.
- Allows drawdown of the basin if needed for maintenance.

Overview Table

Associated Costs	L	M	H
Design		X	
Construction			X
Maintenance			X
Pollutant Removal	**L**	**M**	**H**
Suspended Solids	-		
Nutrients	-		
Heavy Metals	-		
Hydrocarbons	-		

Limitations

- Drawdowns and other orifices within the principal spillway can become clogged with sediment.
- Trash and debris can clog and potentially damage the spillway structure and embankment due to overflows.
- May require frequent maintenance depending on trash, debris, and sediment loading.

Principal Spillways

BEST MANAGEMENT PRACTICE (BMP) DESCRIPTION

Spillways

The principal spillway is the primary outlet for a stormwater detention facility; it is also known as the outlet works. Spillways can be comprised of risers, pipes, weirs, or a combination of the components. Principal spillway conduits are usually constructed through an embankment and carry a 10 yr and/or lesser events in a controlled manner. To reduce the risk of seepage through the embankment along the pipe, anti-seepage collars should be used.

Emergency spillways are used to provide controlled flow for storms that exceed the maximum design storm for the principal spillway. This secondary structure is typically a weir which is separate from the primary outlet structure; it is constructed as part of the basin's embankment. The emergency spillway is sized to handle storms in excess of the principal spillway design storm with a minimum of 1 foot of freeboard between the water surface elevation and the top of the embankment.

BMP Components

Berm (Embankment) – A berm is a compacted earthen ridge designed to capture and detain stormwater flows for a given design storm. Consideration should be given to the velocity of flow over the emergency spillway and at the toe. Protection or energy dissipation should be provided where velocities and turbulence are a concern.

Total Depth – The total depth of the basin from the lowest elevation of the bottom to the top of the berm or embankment. For a basin that is online, this depth includes the capacity required to handle the Water Quality Volume (WQV) and any additional storage for peak flow reduction. It includes a minimum of 1 foot of freeboard from the design water surface elevation in the emergency spillway to the top of the berm or embankment.

Outlet Structure – An outlet structure is a standpipe or structure designed to draw down and route excess stormwater that is stored in the basin. When extended detention is desired, a multi-stage structure is typically needed. For extended dry detention basins, a pipe or an orifice opening is typically provided at the bottom of the basin to draw down the WQV. For wet detention and stormwater wetlands the WQV opening sets the permanent pool elevation. Other controls (orifice or weir) are provided to draw down larger storm events (i.e., 2 yr & 10 yr) at predetermined maximum rates.

> ***WQV Discharge Pipe***– WQV, or the first ½ inch of runoff, will be discharged from the detention facility through the utilization of a perforated riser pipe and control valve. The perforated riser will be used to screen debris and trash and will be braced to restrict movement. 1"-3" limestone rock placed around the perforated pipe for the extended dry detention basin helps keep sediment contained to the basin. For wet detention basins, perforations will draw the WQV down to the permanent pool level. Whereas in extended dry detention basins the perforated riser will drawdown to the basin bottom dry condition. In either situation, the perforated risers will connect to control valves that regulate discharge rates.

Principal Spillways

Drawdown Pipe – Wet detention facilities will need an additional drawdown pipe in case the basin must be emptied for inspection and maintenance. The drawdown will be regulated by a control valve.

Anti-seep Collar – Water travels within a pipe, but it can also travel along the outside of a pipe. Seepage along a pipe can undermine the earthen embankment as well as cause washouts. Anti-seep collars are used to prevent piping and therefore maintain structural integrity of the embankment. Anti-seep collars can be comprised of PVC, concrete, rubber, or plastics.

Anti-vortex Device –Water that enters the principal spillway outlet structure can be classified at orifice or weir flow. If orifice flow governs, then air-entrainment can occur, causing a loss of efficiency and potential cavitation. Anti-vortex devices, such as a baffle should be utilized in these situations to prevent swirling of water and in turn, air-entrainment.

Principal Spillways

DESIGN CONSIDERATIONS

Questions to ask yourself…

- Q. Is the spillway for a wet or an extended dry detention basin?
- Q. What size is the design storm, or is the design based on the WQV?
- Q. Will orifice hoods or trash racks be utilized to prevent debris from entering the spillway?
- Q. Are anti-seepage or anti-vortex devices needed for this design?

Consider the ramifications of where the principal spillway is placed. It should be close to the shoreline and easily accessible for maintenance activities. It is typically positioned adjacent to the basin's embankment to minimize outlet pipe length. Consideration should be given to constructability, accessibility for maintenance and inspection, and the routing of storms during construction. Thought should be given to public safety and proper placement safeguards the structure from tampering. The designer should also reference design guides for whatever treatment BMP is utilized (i.e., wet detention, extended dry detention, or stormwater wetland).

The WQV discharge pipe or structure is an essential component of the principal spillway system. These features should be designed to allow the reservoir to be drained in a reasonable amount of time. 1"-3" limestone should be placed around the perforated pipe openings to reduce the risk of clogging. For wet detention basins and stormwater wetlands, the perforation will begin above the permanent pool volume to capture the WQV, and an additional valved drawdown pipe is needed for occasional pond drainage. For the extended dry detention basin, the perforated riser is designed to capture the WQV as well as function as a drawdown pipe. Drawdown for extended detention on both wet and dry detention basins will be regulated by valves that will be designed one standard opening size larger than needed and constructed to reduce drawdown time to the desired period. Additionally, both situations use oversized perforated pipes. These pipes are designed so that the minimum area of perforation openings is four times larger than the orifice opening size. This allows the valve to govern drawdown or drainage at a controlled rate even if some of the perforations are plugged.

Principal spillways can include a combination of weirs and orifice flows to convey the design floods in addition to conveying the WQV. Orifices may be hooded; this prevents surface debris from entering the orifice. It is an easy screening process that obtains water from below the water's surface. Hoods or shrouds, if used, should be secured to the structure and can be fabricated from stainless or galvanized steel. Plastic proprietary shrouds may also be used if approved by NDOR.

Trash racks and anti-vortex devices are utilized to maintain the structural integrity of the principal spillway. Trash racks must be used on weir openings to prevent debris from entering the spillway structure. Trash racks can be made of metal or plastic, and have openings that are typically 6"-12". Options can be found in NDOR's APL. Anti-vortex devices may be used if orifice flow occurs in the principal spillway riser pipe. These devices reduce air-entrainment and cavitation in the pipe.

Principal Spillways

Principal spillway conduits are usually constructed through an embankment. Anti-seepage collars should be used if the conduit is larger than 8 inches in diameter of smooth pipe, or corrugated pipe larger than 12 inches in diameter. They are designed to prevent seepage through the embankment along the outlet pipe. They should extend at least 2 ft in all directions around the pipe, and should be placed a minimum of 2 ft away from pipe joints unless flanged joints are used. Collars should be placed often enough to increase the seepage length by a minimum of 15%. After backfilling, hand powered compaction should be used near the collar to prevent any damage.

At the end of the principal spillway conduit there must be energy dissipation such as a riprap pad or plunge pool to prevent erosion on the downstream side of the embankment.

Principal Spillways

DESIGN CRITERIA

Description	Value
Water Quality Volume (WQV)	Reference Chapter 3 of NDOR's *Drainage Design and Erosion Control Manual* Volume routed through perforated riser
Setback Distances	Reference NDOR's Treatment BMP Guide for the Appropriate BMP
Minimum V_{EX} Drawdown Time	24 hours (72 hours maximum)
Freeboard	Minimum of 1 ft above the emergency spillway WSEL
Trash Rack	6"-12" typical opening size Select from NDOR's Approved Products List (APL)
Anti-Vortex Device	Needed if orifice flow occurs. Dictated by ratio of hydraulic head (H) to riser pipe radius (R) H/R < 0.5 : Weir Flow 0.5 < H/R < 1 : Transitional Flow H/R > 1 : Orifice Flow
Anti-Seep Collar	Needed if: -Smooth Pipe diameter > 8 inches -Corrugated Pipe diameter > 12 inches 2 ft around pipe in all directions 3 ft thick for RCP
Perforated WQV/ Drawdown Pipe Opening Area	Four times the area required for the WQV orifice opening
Average Depth	**See additional guides: Wet Detention, Extended Dry Detention, and Stormwater Wetlands** Wet Detention (permanent pool)= 3-7 feet Extended Detention depth= <3 feet Stormwater Wetlands= 6 feet

Principal Spillways

DESIGN PROCEDURE:

Size Reservoir

Step 1: Calculate Water Quality Volume (WQV)

Calculate WQV as defined in Chapter 3 of NDOR's *Drainage Design and Erosion Control Manual*. Reference other guides (i.e., wet detention, extended dry detention, stormwater wetlands) to size the reservoir based on WQV.

Step 2: Determine design peak discharge

Calculate discharge rates for each design storm as defined in Chapter 1 of NDOR's *Drainage Design and Erosion Control Manual*. Provide additional storage as needed to reduce peak runoff in the detention facility.

Size Outlets

Step 1: Size the orifice for WQV drawdown

Use the average discharge rate and the average hydraulic head to calculate the orifice size for the Minimum WQV Drawdown Time provided in the design criteria table above.

Find the average discharge rate:

$$Q = WQV/t/3600$$

Q = average orifice discharge rate (cfs)
t = WQV drawdown time (hours)

Find the orifice area:

$$A = Q/[C * \sqrt{2gh}]$$

A = orifice area (ft^2)
C = orifice discharge coefficient, dimensionless (0.60 typ)
g = acceleration of gravity (ft/s^2)
h = average hydraulic head (ft)
(height measured from orifice invert to midpoint of extended detention depth – assumes orifice is small relative to total height)

Find the orifice diameter:

$$d = \sqrt{\frac{4A}{3.14}} * 12$$

d = orifice diameter (in)

Principal Spillways

For both dry and wet basins a perforated riser will be utilized to screen trash and debris, but a control valve will regulate drawdown. The total area of perforated openings should be oversized, to account for potential clogging over time. As a minimum, the total area of perforated opening (A_{design}), should be four times the orifice opening.

$$4 * A \leq A_{design}$$

The following table can be used to determine how many perforations are needed:

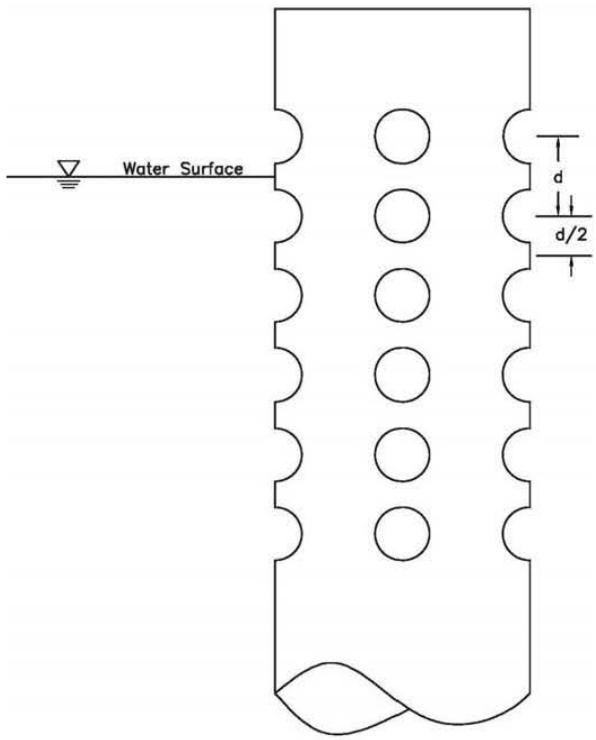

Perforated Riser Pipe Detail
No Scale

Hole Diameter (in)	Area (in^2)
1/8	0.013
1/4	0.049
3/8	0.110
1/2	0.194
5/8	0.307
3/4	0.442
7/8	0.601

Principal Spillways

1	0.785

Maximum Number of Perforated Columns per Row				
Riser Diameter (in)	Hole Diameter, inches			
	¼"	½"	¾"	1"
	# per row (*area per row- in²*)	# per row (*area per row- in²*)	# per row (*area per row- in²*)	# per row (*area per row- in²*)
4	8 *(0.392)*	8 *(1.552)*	--	--
6	12 *(0.588)*	12 *(2.328)*	9 *(3.978)*	--
8	16 *(0.784)*	16 *(3.104)*	12 *(5.304)*	8 *(6.28)*
10	20 *(0.980)*	20 *(3.88)*	14 *(6.188)*	10 *(7.85)*
12	24 *(1.176)*	24 *(4.656)*	18 *(7.956)*	12 *(9.42)*

Buoyancy calculation:

Flotation of the riser structure can lead to a failed connection between the riser and the barrel, and even failure of the embankment (buoyancy should be calculated for risers that are partially perforated as well). Therefore, the size of the riser should be selected with this in mind.

Step 2: Size the orifice or weir for design storms

Outlets for design storms can be a combination of orifice and weir flow. Provide calculations/model to ensure that the outlets and pipe for the spillway are sized in accordance with a design storm using Chapter 1 of NDOR's *Drainage Design and Erosion Control Manual*.

Step 3: Verify weir/orifice conditions to determine if anti-vortex device is needed

The 10-yr storm is typically the largest storm event routed through a riser pipe. Using the selected model determine H, the water depth above the weir (ft), and R, the radius of the riser (ft). The principal spillway is governed by weir flow if the H/R ratio does not exceed 0.5. If it is designed to allow for water depths that cause H/R ratio to exceed 0.5 then the flow is transitional. If the H/R ratio is 1 or greater than orifice flow dominates and anti-vortex devices are needed within the spillway.

Step 4: Size the emergency spillway for larger design storms

The emergency spillway earthen embankment should be sized for design storms that exceed capacity of the principal spillway. Typically they are designed for 100-yr storms

with 1 ft of freeboard above that water surface elevation. The emergency spillway should be designed to withstand the anticipated shear stresses and erosion.

Principal Spillways

DESIGN EXAMPLES

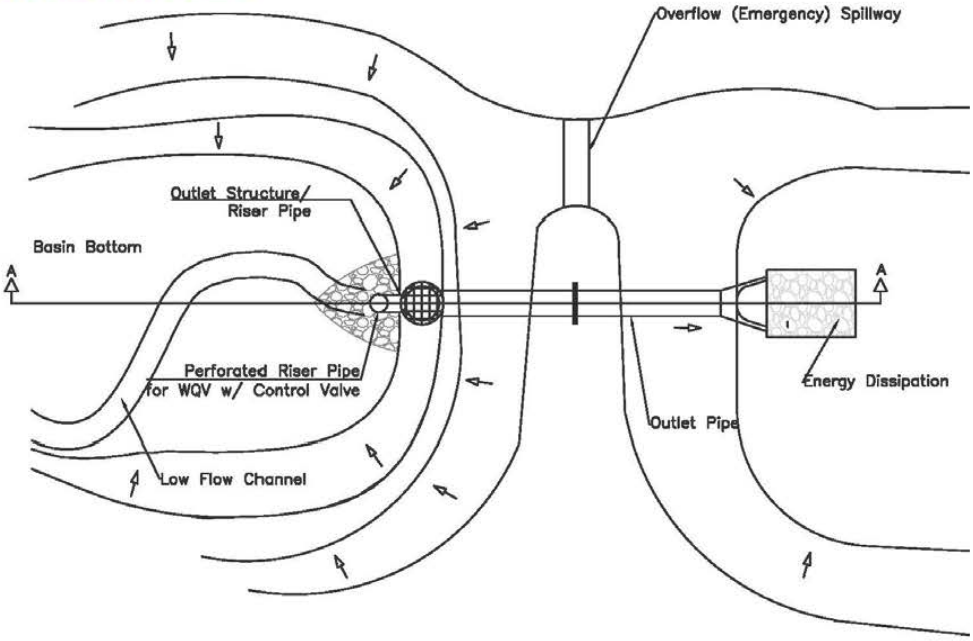

Principal Spillway for Extended Dry Detention
No Scale

Design storms are used for example only.
They may vary for each design.

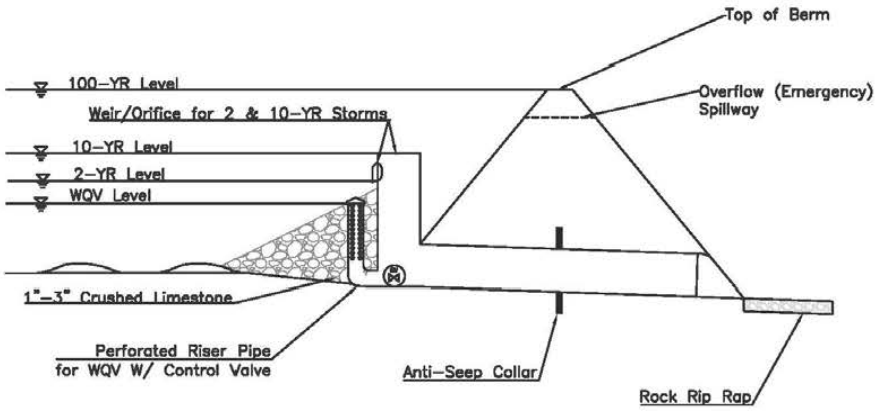

Section A–A
No Scale

Plan and Profile of a Principal Spillway for an Extended Dry Detention Basin.

Principal Spillways

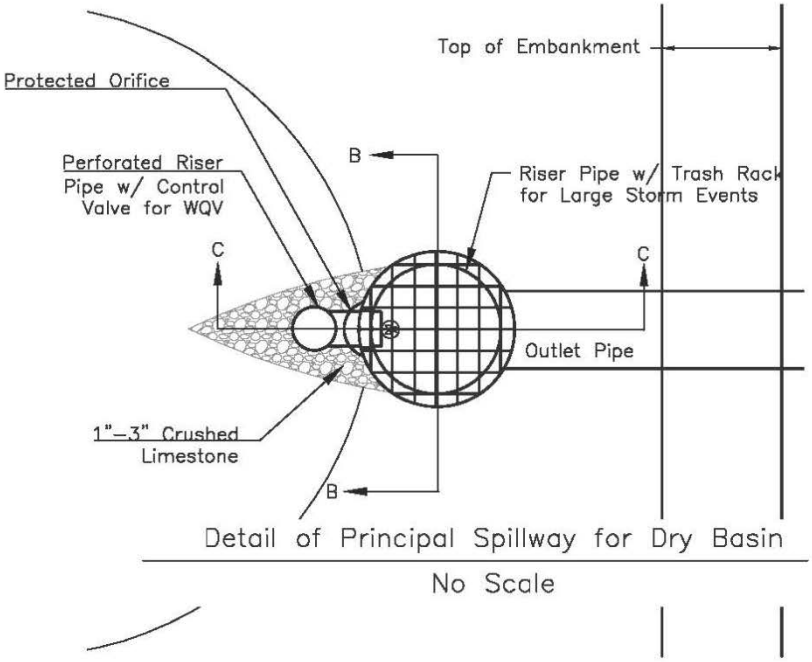

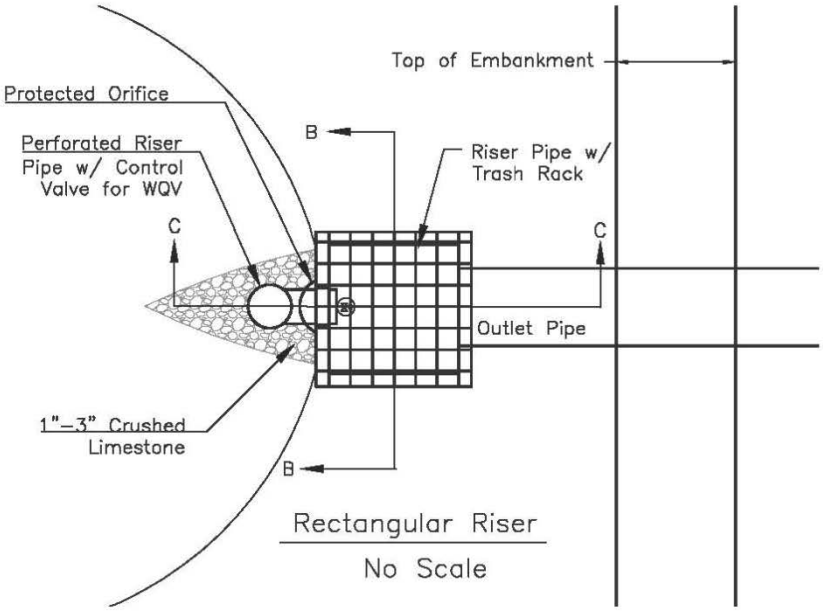

Detail for Principal Spillway with a circular or rectangular riser in a dry basin.

Principal Spillways

Detail of Circular and Rectangular Risers for Extended Dry Detention Basins

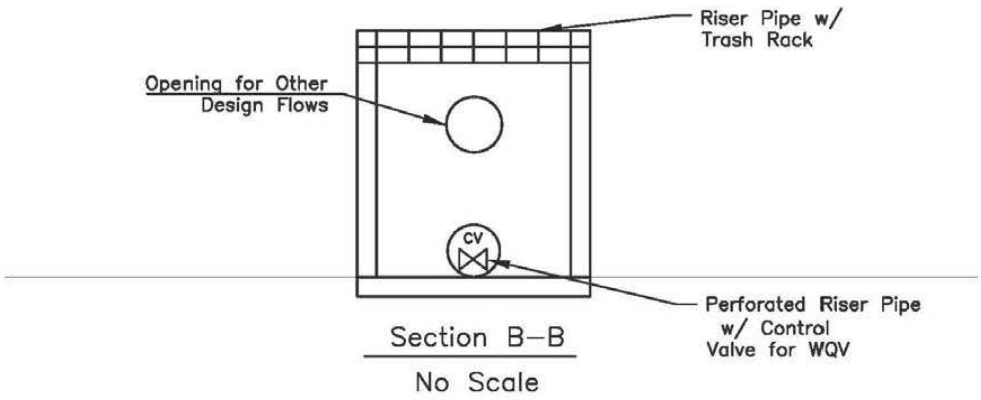

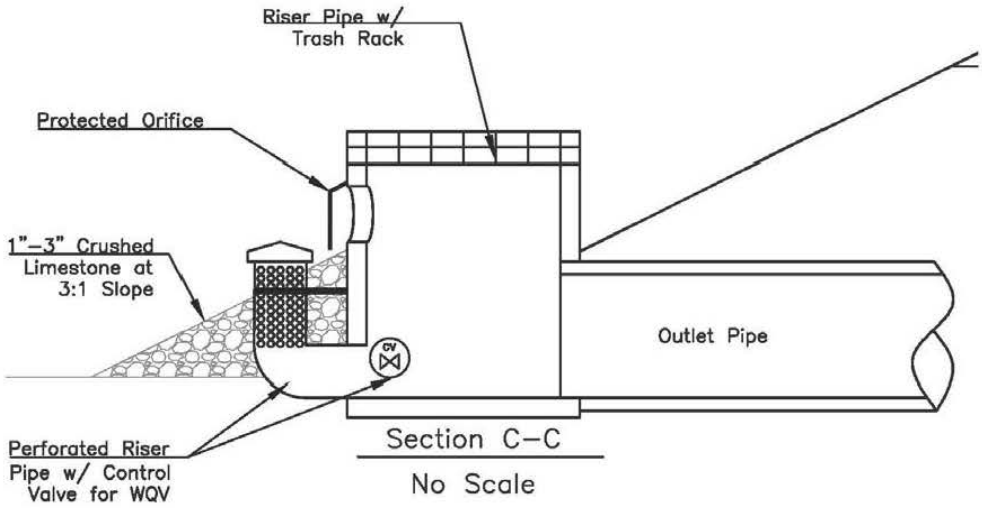

Detailed sections of circular and rectangular principal spillways for extended dry detention basins.

Principal Spillways

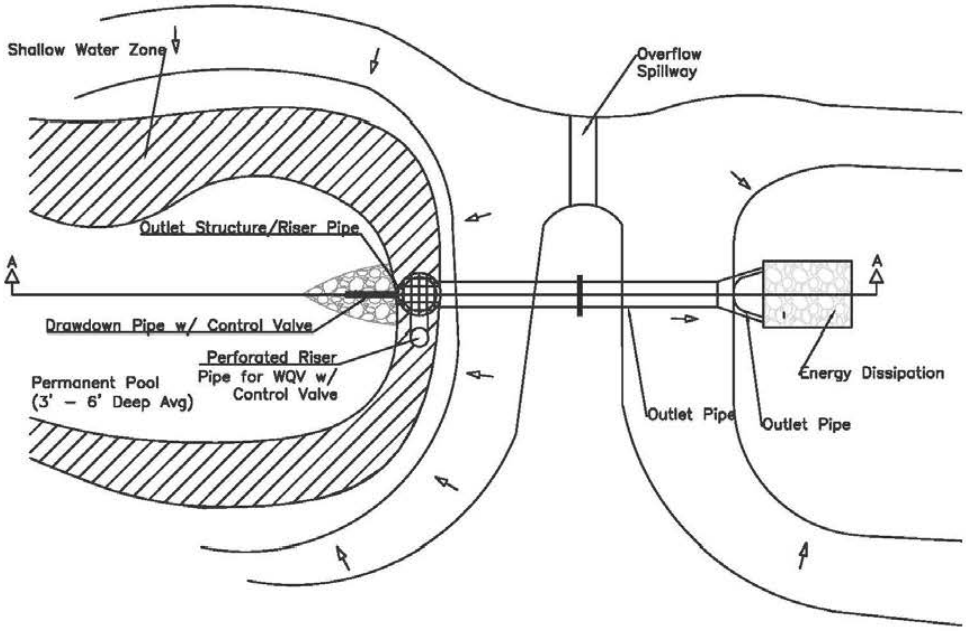

Principal Spillway for Wet Detention Basin/Stormwater Wetland
No Scale

Design storms are used for example only.
They may vary for each design.

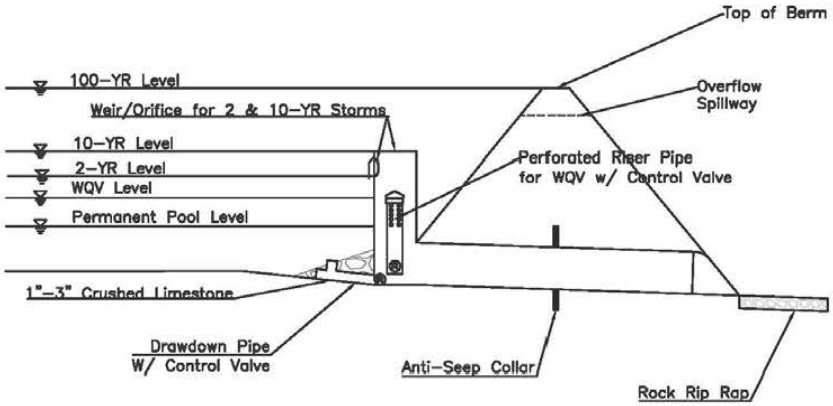

Section A–A
No Scale

Plan and Profile of a Principal Spillway for a Wet Basin.

Principal Spillways

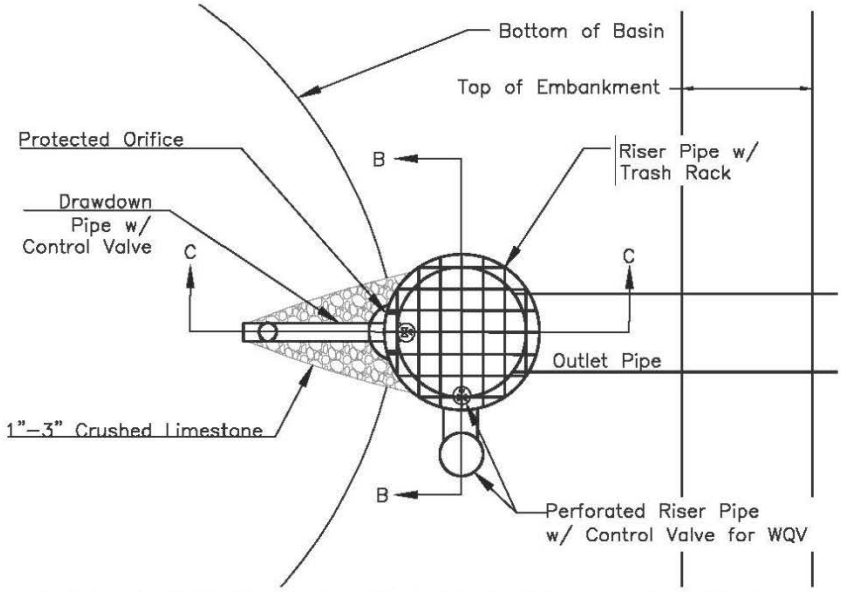

Detail of Principal Spillway for Wet Basin/Stormwater Wetland

No Scale

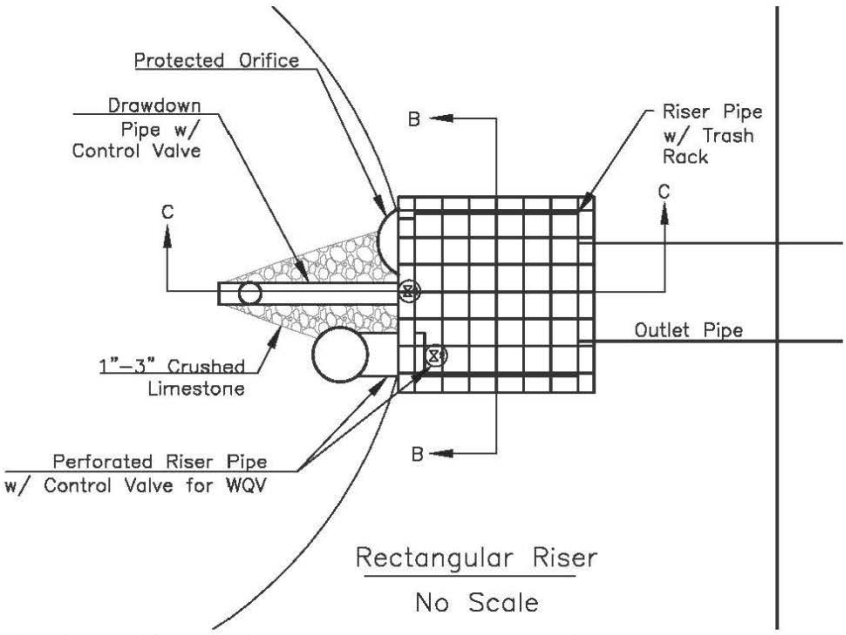

Rectangular Riser

No Scale

Detail for Principal Spillway with a circular or rectangular riser in a wet basin.

Principal Spillways

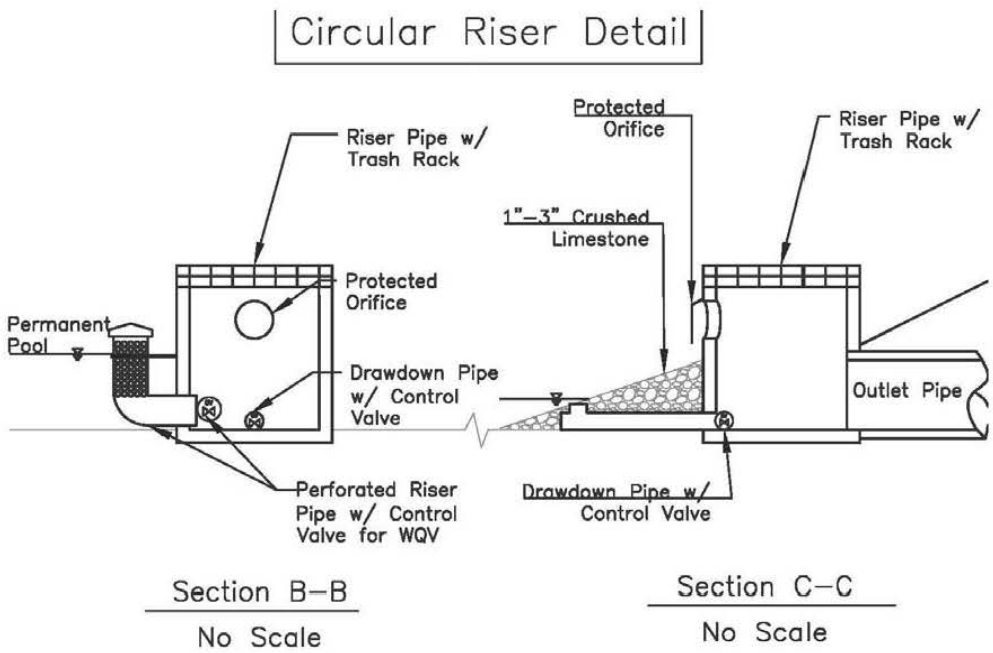

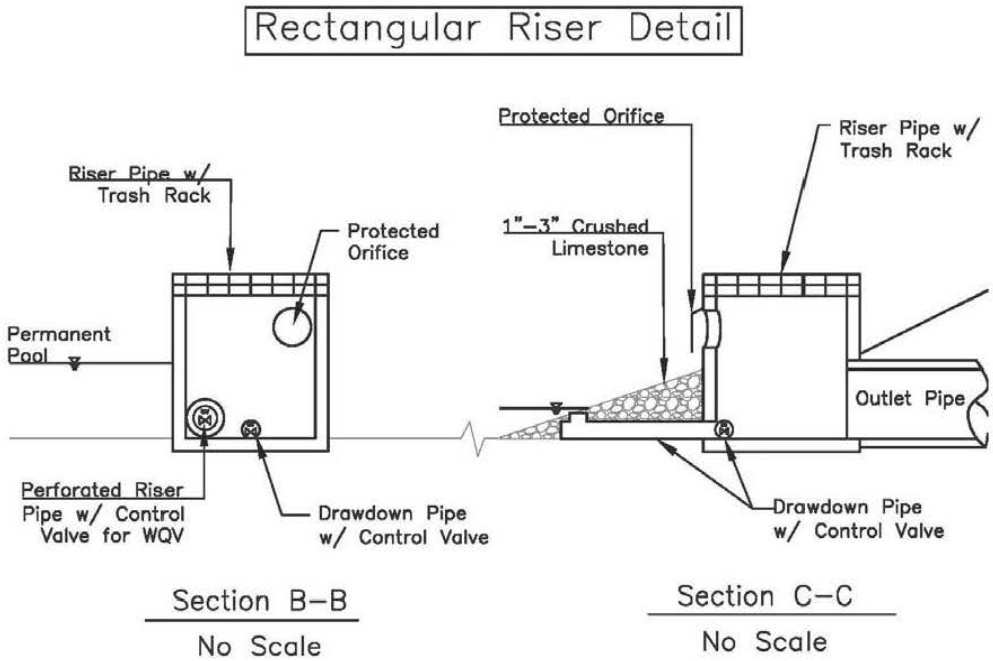

Detailed sections of circular and rectangular principal spillways for wet basins.

Principal Spillways

CONSTRUCTION CONSIDERATIONS

- Consider in advance the construction sequencing and erosion and sediment control practices during site construction.
- The basin may be used to control sediment during construction. However, the sediment will have to be removed before completing the project unless additional sedimentation volume has been incorporated into the design and that design amount has not been exceeded.
- Basins used to control sediment during construction may need to be converted to a post-construction permanent structure. Site should be stabilized prior to conversion, and perforated riser pipe and 3" protective stone should be installed last.
- Ensure stability on the downstream side of the outlet pipe with riprap or another energy dissipating device to reduce erosion.
- Build the principal spillway while the system is offline. Make provisions to divert water while constructing spillway if constructed online.
- Silt traps can be converted to wet basins. To prevent silting in of the principal spillway the system should be offline or water diverted, and the perforated riser pipe and 3" protective stone should be installed last.

MAINTENANCE AND INSPECTION REQUIREMENTS

The maintenance objectives for a spillway include providing litter control, maintaining the spillway structure, and preventing erosion.

Maintaining Principal Spillway Structure

Principal Spillway structures can be clogged with sediment, trash, or other debris. Trash racks can be utilized to prevent clogs within the riser pipe. The trash rack should be checked to make sure it fits securely to the outlet structure. Spillways plugged with debris or trash reduce the capacity of the spillway. Additionally, the plugged spillway may cause more frequent flows in the emergency spillway. Therefore, the trash rack and all openings should be checked for obstructions from trash, debris, and sediment. They should be inspected annually and cleaned out.

Rock protection drawdown pipes from sediment should be inspected, and sediment volumes in the basin should be checked.

Valves should be inspected for blockage, leaks, corrosion, or any sort of wear and repaired immediately.

Conduits should be inspected thoroughly once a year for sagging, displacement at joints, cracks/leaks, signs of piping, any sort of surface wear or corrosion, and lastly, blockage.

Outlet Structures should be inspected annually for blockage from trash or other debris; wear of the structure should be assessed and fixed. The inspection should also look for signs of seepage or piping along the outside of the pipe at or near the outlet. This might include erosion around the edges or top of the outlet, unexpected seepage during dry conditions, and unexplained sediment near the outlet. Energy Dissipators such as riprap aprons shall be inspected annually and should be replaced if ineffective or silted in. Erosion issues should be assessed and repaired.

Embankment and Emergency Spillway

Seepage can also lead to erosion of soil and loss of stability on the downstream side of the embankment which may cause failure of the dam. Signs of embankment cracks or settling should be remedied. Cracking and settling can lead to structural failure of the embankment as well. Lastly, surface erosion can cause a structural failure and therefore it should be prevented.

Principal Spillways

Frequency	Inspection and Maintenance Activity
After Construction (While NPDES Permit is Open)	• Check basin 3 days (72 hours) after a major rainfall event (≥ ½ inch) to ensure drainage of the basin to permanent pool elevation. • Inspect system bi-weekly and after any major rainfall event (≥ ½ inch) for a water surface elevation that is consistently lower than design permanent pool elevation. If so, investigate to determine the cause (such as inflow, drought, or excessive seepage). • Inspect inlets, outlet pipe, and downstream side of outlets bi-weekly for erosion and any damage by equipment or vehicles after every major rainfall event (≥ ½ inch). Repair as needed. • Inspect basin bi-weekly for excessive sediment buildup on the bottom of the basin and at any inlets, outlet pipes, and forebays. Remove sediment as needed. • Remove trash and debris bi-weekly from the basin and any inlets, outlet pipes, and forebays. In particular, remove trash and debris from trash racks and openings in the inlet structure. • Inspect and maintain stormwater treatment BMPs in accordance with their respective design guidelines.
Semi-annually (Through First Two Years From End of Construction)	• Semi-annual inspections should occur 3 days (72 hours) after a major rainfall event (≥ ½ inch) to ensure drainage of the basin to permanent pool elevation. • Inspect basin for a water surface elevation that is consistently lower than design permanent pool elevation. If so, investigate to determine the cause (such as inflow, drought, or excessive seepage). • Inspect inlets, outlet pipe, and downstream side of outlets for erosion and any damage by equipment or vehicles after every major rainfall event (≥ ½ inch). Repair as needed. • Inspect basin for excessive sediment buildup on the bottom of the basin and at any inlets, outlet pipes, and forebays. Remove sediment as needed. • Inspect the basin and outlets for trash and debris, erosion, sediment buildup, and structural damage. Repair as needed. • Inspect and maintain stormwater treatment BMPs in accordance with their respective design guidelines.

Principal Spillways

Frequency	Inspection and Maintenance Activity
Annually (After First Two Years From End of Construction)	• Annual inspections should occur 3 days (72 hours) after a major rainfall event (≥ ½ inch) to ensure drainage of the basin to permanent pool elevation. • Inspect wet detention basin for a water surface elevation that is consistently lower than design permanent pool elevation. If so, investigate to determine the cause (such as inflow, drought, or excessive seepage). • Inspect conduits and trash racks for clogging or any damage. Inspect the road on the crest of the embankment for any damage, and investigate rodent populations. • Inspect the principal spillway and embankment for any cracks, slides, sloughing, and settlement. • Inspect basin for a water surface elevation that is consistently lower than design permanent pool elevation. If so, investigate to determine the cause (such as inflow, drought, or excessive seepage). • Inspect inlets, outlet pipe, and downstream side of outlets for erosion and any damage by equipment or vehicles after every major rainfall event (≥ ½ inch). Repair as needed. • Inspect basin for excessive sediment buildup on the bottom of the basin and at any inlets, outlet pipes, and forebays. Remove sediment as needed. • Inspect the basin and outlets for trash and debris, erosion, sediment buildup, and structural damage. Repair as needed. • Inspect and maintain stormwater treatment BMPs in accordance with their respective design guidelines.

RESOURCES AND REFERENCES

Atlanta Regional Commission. *Georgia Stormwater Management Manual – Volume 2: Technical Handbook*. August 2001.

Brater and King 1976.

"Chapter 3- Minimum Standard 3.02- Principal Spillway." *Virginia Department of Conservation and Recreation*. N.p., n.d. Web. 03 June 2013.

"CHUTES AND DROP SPILLWAYS (ENTRANCES-WEIRS)." Watershed Engineering. Cornell University, Fall 2004. Web. 27 June 2013.

Iowa State University – Institute for Transportation. *Iowa Stormwater Management Manual*. October 2009.

Maryland Department of the Environment. *Maryland Stormwater Design Manual*. 2009.

Minnesota Pollution Control Agency. *Protecting Water Quality in Urban Areas - Best Management Practices for Dealing with Storm Water Runoff from Urban, Suburban and Developing Areas of Minnesota*. March 2000.

Nebraska Department of Environmental Quality. *Title 124 - Rules and Regulations for the Design, Operation and Maintenance of Onsite Wastewater Treatment Systems*. December 2007.

Nebraska Department of Natural Resources. *Chapter 46, Article 16: Safety of Dams and Reservoirs*. December 2011.

Nebraska Department of Natural Resources. *Title 458, Nebraska Administrative Code, Chapters 1-13; NDNR Rules for the Safety of Dams and Reservoirs*. June 2008.

Nebraska Department of Roads. *Drainage Design and Erosion Control Manual*. August 2006.

New York State Department of Environmental Conservation. *New York State Stormwater Management Design Manual*. August 2010.

North Carolina. Department of Environment and Natural Resources. Division of Land Resources Land Quality Section. *Dam Operation, Maintenance, and Inspection Manual*. N.p.: n.p., 2007. Print.

Olsson Associates. *Omaha Regional Stormwater Design Manual*. Rep. April 2006.

Truckee Meadows Regional Storm Water Quality Management Program. *Structural Controls Design Manual*. April 2007.

Virginia Department of Conservation and Recreation. *Chapter 5 Engineering Calculations*.1994

United States Department of Agriculture Soil Conservation Service. *Agriculture Handbook Number 590, Ponds – Planning, Design, Construction*. 1997.

Urban Drainage and Flood Control District. *Urban Storm Drainage Criteria Manual Vol 3*. 2010.