PROJECT NO.	SHEET NO.

C.N.

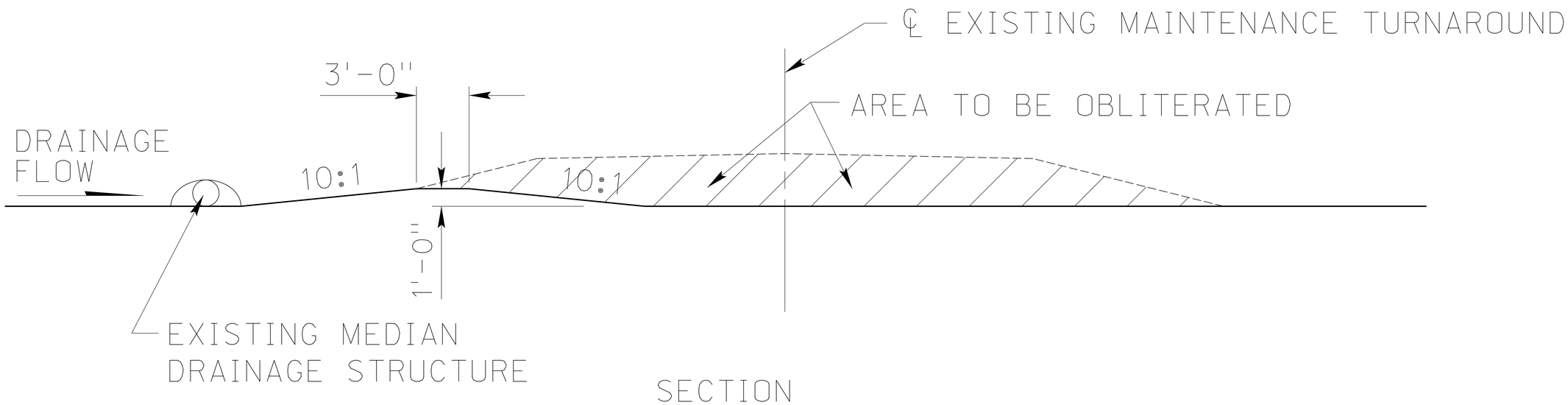

SECTION

OBLITERATION OF EXISTING MAINTENANCE TURNAROUND

ROADWAY DESIGN DIVISION
Computer: DRDESIGN147
User: dor13017
Date: 18-APR-2016 09:10
File: 11115e00.dgn
SHEET Scale: 1:100

PROJECT NO.	SHEET NO.

C.N.

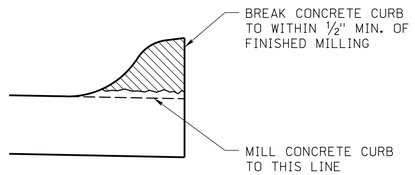

CURB REMOVAL DETAIL

VIEW 1

(THIS SKETCH IS TO BE USED WHEN
SURFACE WILL NOT BE OVERLAYED)

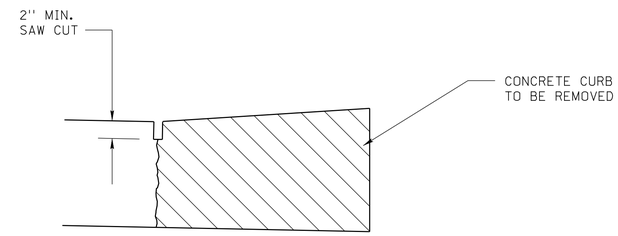

CURB REMOVAL DETAIL

VIEW 3

(THIS CAN ALSO BE REMOVED AS PAVEMENT)

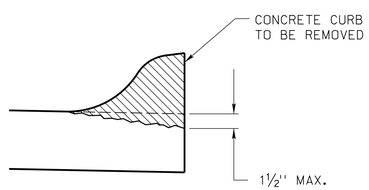

CURB REMOVAL DETAIL

VIEW 2

(THIS SKETCH IS TO BE USED WHEN
SURFACE WILL BE OVERLAYED)

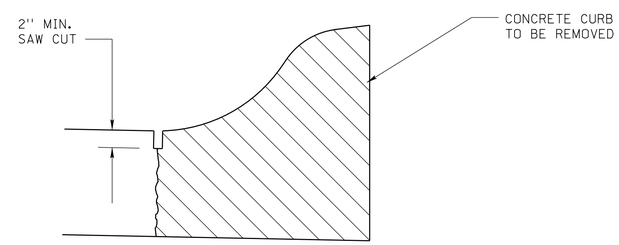

CURB REMOVAL DETAIL

VIEW 4

NOTE:
THIS SKETCH IS NORMALLY NOT REQUIRED AS IT
IS COVERED IN THE SPECS. HOWEVER IF THE
CURB IS TO BE REMOVED MORE THAN 1 WAY ON
A PROJECT EACH SHOULD HAVE A SKETCH AND
IDENTIFY WHERE IT IS APPLICABLE

(THIS CAN ALSO BE REMOVED AS PAVEMENT)

ROADWAY DESIGN DIVISION
Computer: DRDESIGN147
User: dor13017
Date: 18-APR-2016 09:10
File: 13605e01.dgn
Scale: 1:100
SHEET 5 OF 1

THIS PLAN IS DRAWN AT 100 SCALE.

PROJECT NO.	SHEET NO.

C.N.

NOTE: FOR ADDITIONAL DETAILS SEE
DRAINAGE CROSS-SECTIONS.

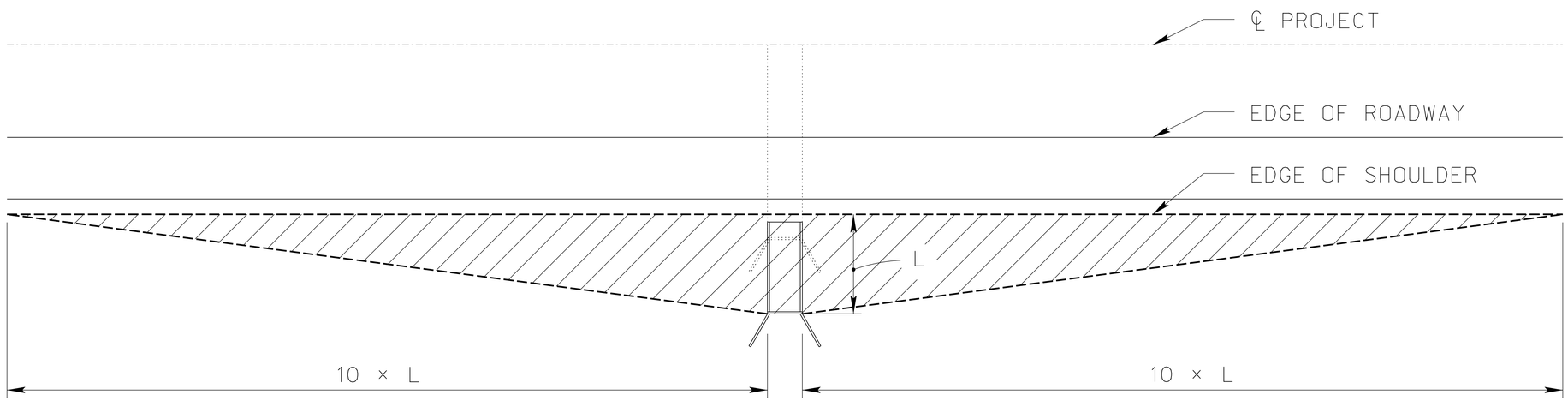

PLAN

GRADING FOR BOX CULVERT EXTENSIONS

THIS PLAN IS DRAWN AT 200 SCALE.

ROADWAY DESIGN DIVISION
Computer: DRDESIGN147
User: dor13017
Date: 18-APR-2016 09:10
File: 14005e01.dgn
Scale: 1:100
SHEET 1 OF 1

PROJECT NO.	SHEET NO.

C.N.

NOTE: FOR ADDITIONAL DETAILS SEE
DRAINAGE CROSS-SECTIONS.

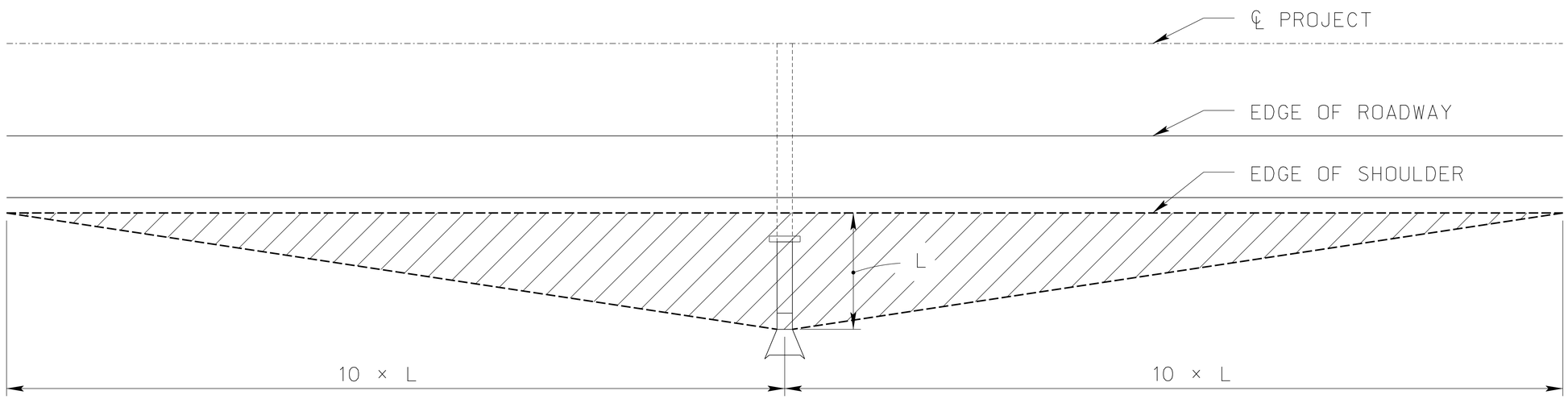

PLAN

GRADING FOR CULVERT EXTENSIONS

THIS PLAN IS DRAWN AT 200 SCALE.

ROADWAY DESIGN DIVISION
Computer: DRDESIGN147
User: dor13017
Date: 18-APR-2016 09:10
File: 14015e01.dgn
Scale: 1:100
SHEET 1 OF 1

PROJECT NO. | SHEET NO.

C.N.

VIEW 1

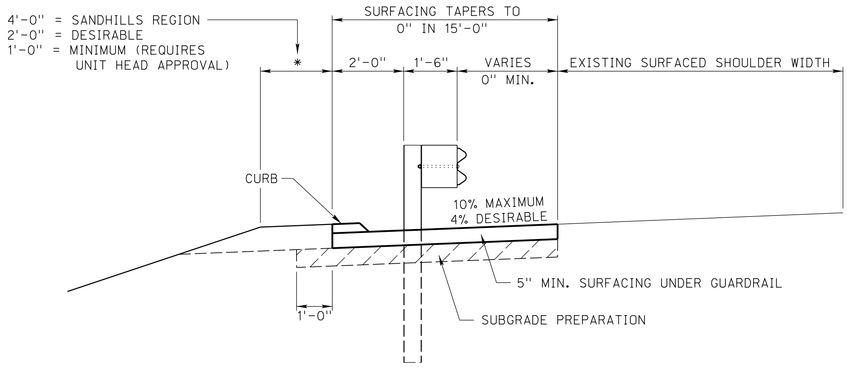

SURFACED SHOULDER WIDENING WITH CURB AT GUARDRAIL LOCATIONS

VIEW 2

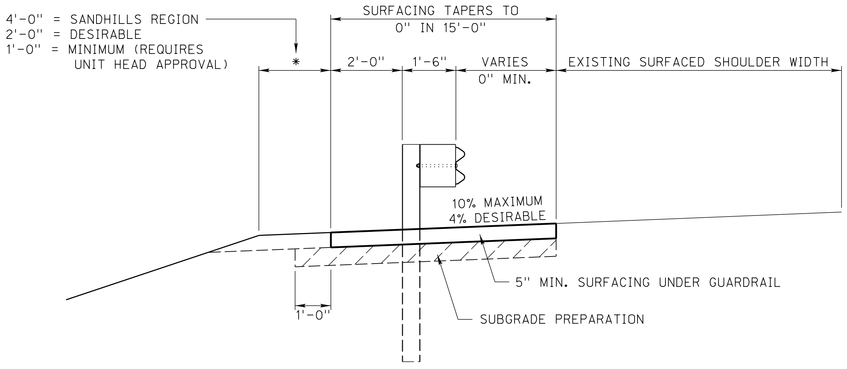

SURFACED SHOULDER WIDENING AT GUARDRAIL LOCATIONS

31" HEIGHT

PROJECT NO. SHEET NO.
C.N.

VIEW 3

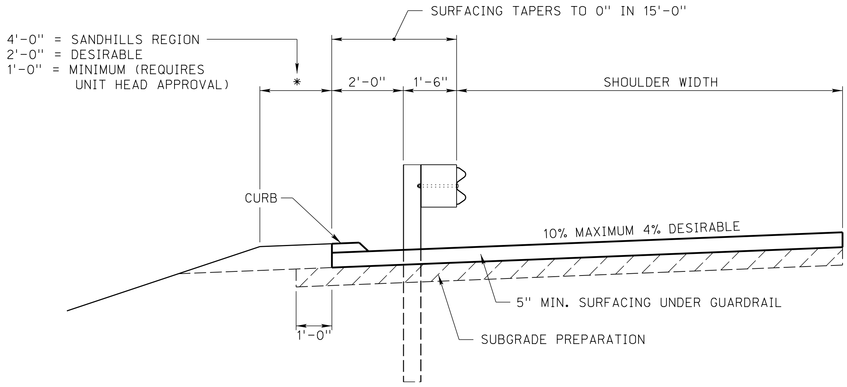

SURFACED SHOULDER WITH CURB AT GUARDRAIL LOCATIONS

VIEW 4

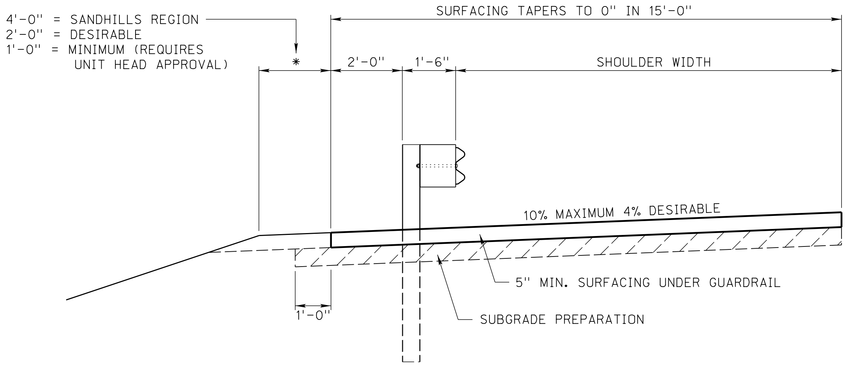

SURFACED SHOULDER AT GUARDRAIL LOCATIONS

31" HEIGHT

File: 17315e02.dgn Scale: 1:100 Date: 18-APR-2016 09:10 User: dor13017 Computer: DRDESIGN147 ROADWAY DESIGN DIVISION

PROJECT NO. | SHEET NO.

C.N.

VIEW 5

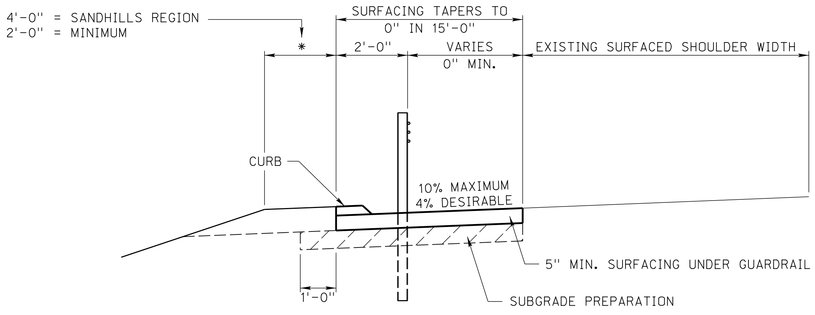

SURFACED SHOULDER WIDENING WITH CURB AT CABLE GUARDRAIL LOCATIONS

VIEW 6

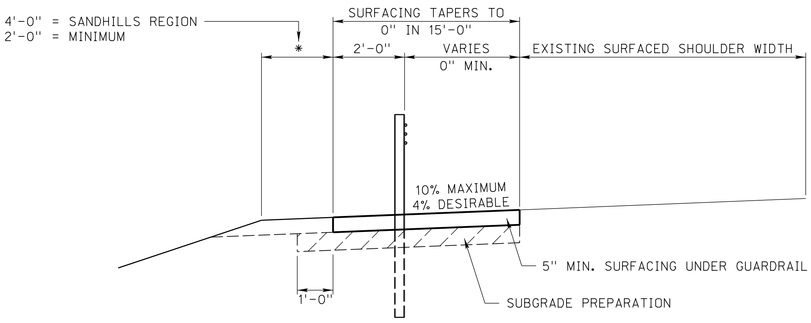

SURFACED SHOULDER WIDENING AT CABLE GUARDRAIL LOCATIONS

31" HEIGHT

PROJECT NO. | SHEET NO.

C.N.

VIEW 7

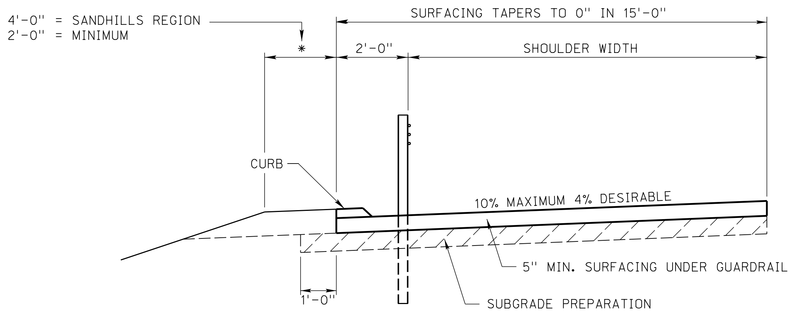

SURFACED SHOULDER WITH CURB AT CABLE GUARDRAIL LOCATIONS

VIEW 8

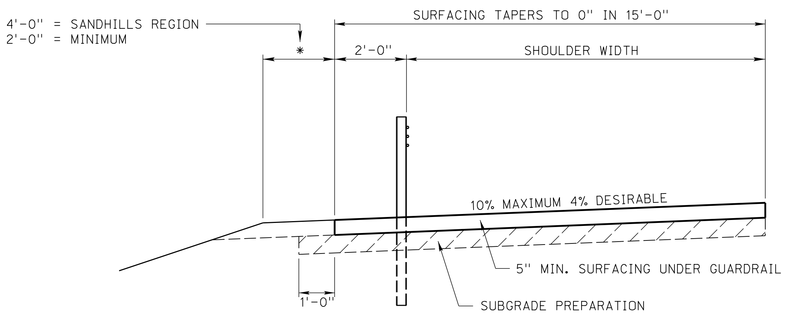

SURFACED SHOULDER AT CABLE GUARDRAIL LOCATIONS

31" HEIGHT

VIEW 9

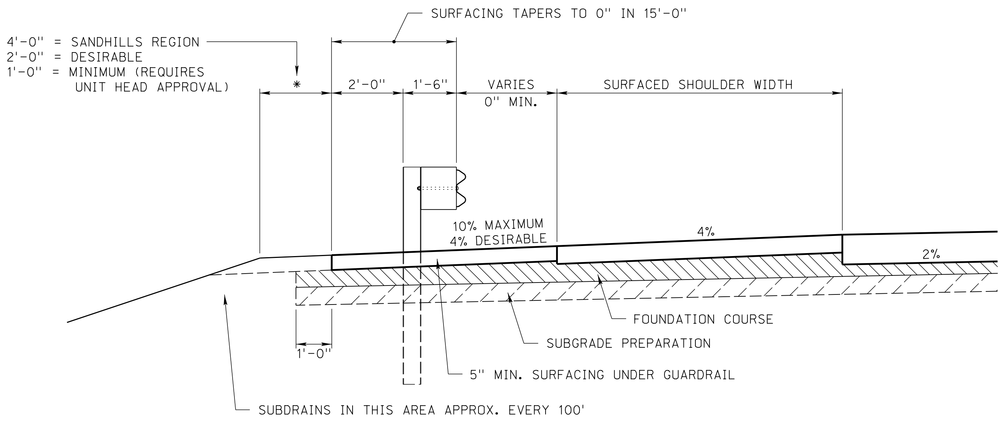

FOUNDATION COURSE AT GUARDRAIL LOCATIONS, SURFACED SHOULDER

31" HEIGHT

PROJECT NO.	SHEET NO.

C.N.

TYPICAL CROSS SECTIONS

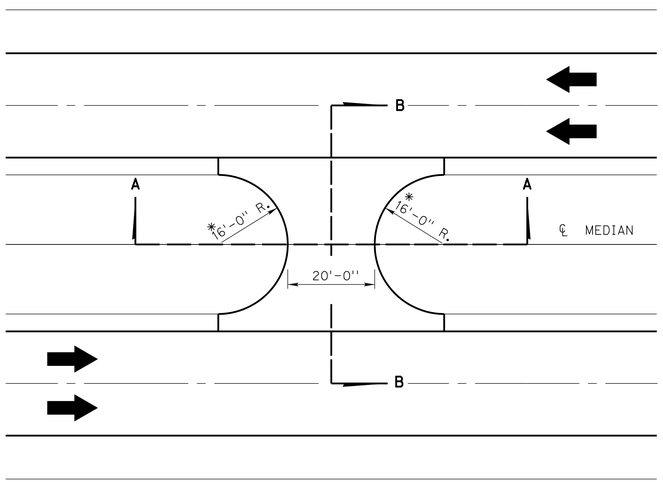

PLAN

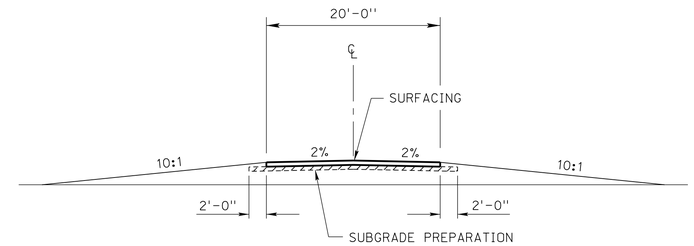

SECTION A-A

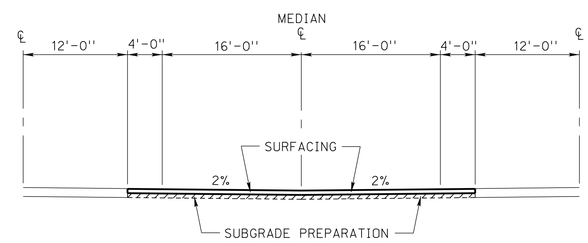

SECTION B-B

DETAILS OF MAINTENANCE TURNAROUND
(40'-0" MEDIAN)

*NOTE: 16'-0" RADIUS BASED ON 4'-0" SHOULDER.

ROADWAY DESIGN DIVISION

Computer: DRDESIGN147

User: dor13017

Date: 18-APR-2016 09:10

File: 19105e03.dgn
Scale: 1:100

THIS PLAN IS DRAWN AT 100 SCALE.

PROJECT NO.	SHEET NO.

C.N.

TYPICAL CROSS SECTIONS

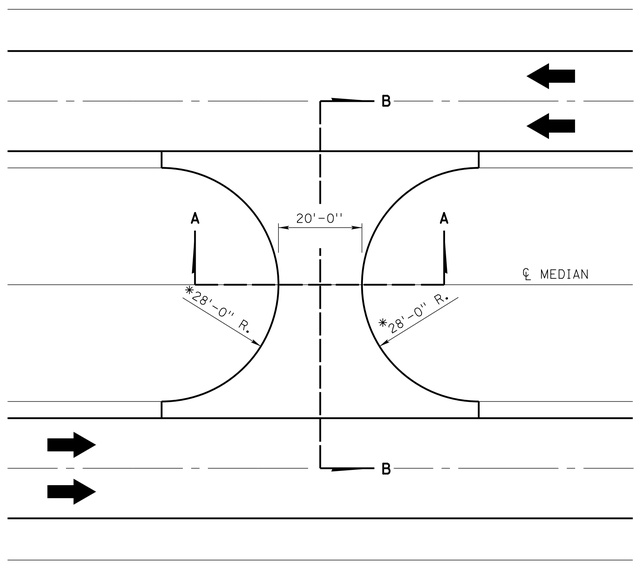

PLAN

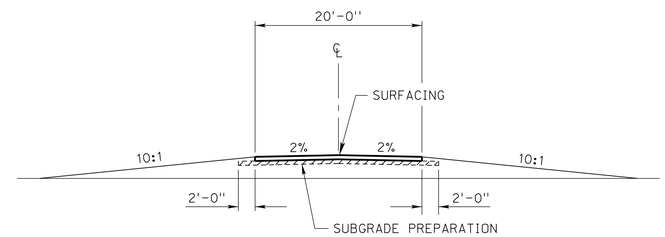

SECTION A-A

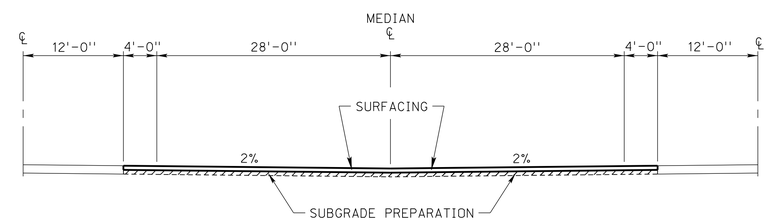

SECTION B-B

DETAILS OF MAINTENANCE TURNAROUND
(64'-0" MEDIAN)

*NOTE: 28'-0" RADIUS BASED ON 4'-0" SHOULDER.

ROADWAY DESIGN DIVISION

Computer: DRDESIGN147

User: dor13017

Date: 18-APR-2016 09:10

File: 19115e03.dgn
Scale: 1:100
SHEET 1 OF 1

THIS PLAN IS DRAWN AT 100 SCALE.

PROJECT NO.	SHEET NO.

C.N.

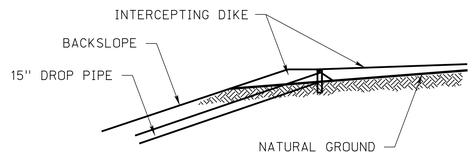

ELEVATION OF INTERCEPTING DIKES

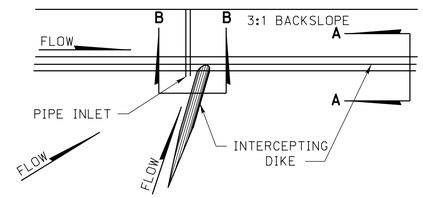

PLAN VIEW OF INTERCEPTING DIKES

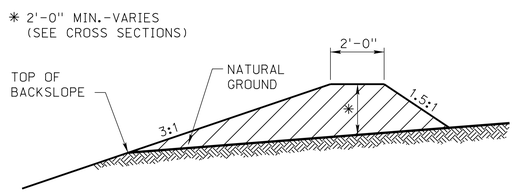

SECTION A-A OF INTERCEPTING DIKE

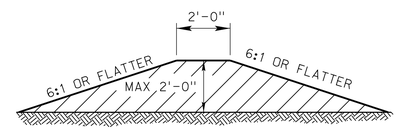

SECTION B-B OF INTERCEPTING DIKE

DESIGN OF INTERCEPTING DIKES

THIS PLAN IS DRAWN AT 100 SCALE.

ROADWAY DESIGN DIVISION
Computer: DRDESIGN147
User: dor13017
Date: 18-APR-2016 09:10
File: 19205e00.dgn
Scale: 1:100
SHEET 1 OF 1

PROJECT NO.	SHEET NO.

C.N.

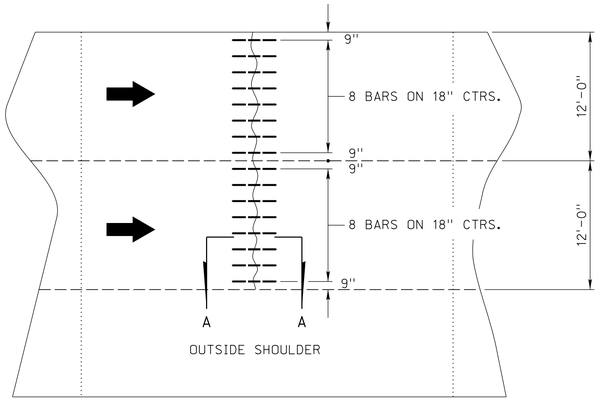

NOTE: TRANSVERSE JOINT SPACING AT 16'-6"

DEFORMED BAR SPACING
(DOWELED CONCRETE PAVEMENT)

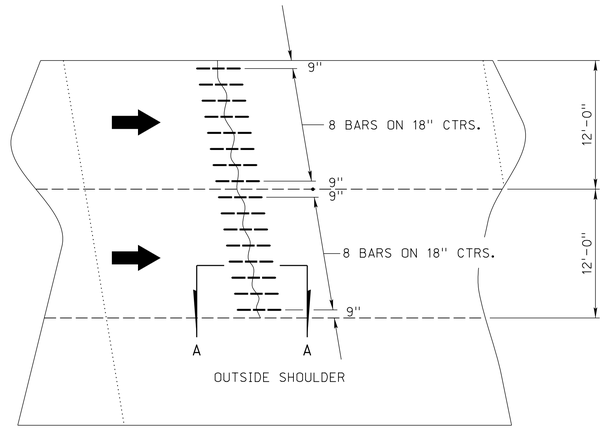

NOTE: SKEWED TRANSVERSE JOINT SPACING AT 16'-6"

DEFORMED BAR SPACING
(PLAIN CONCRETE PAVEMENT)

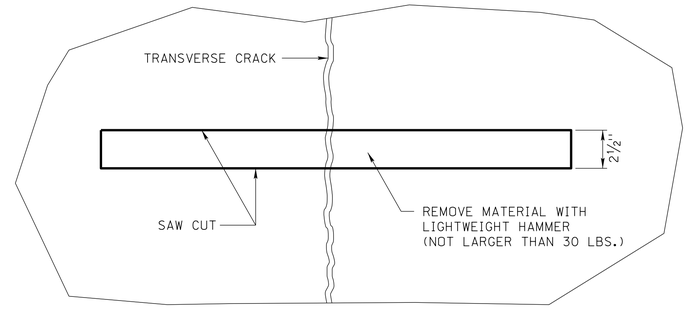

PLAN VIEW DEFORMED BAR SLOT MATERIAL REMOVAL

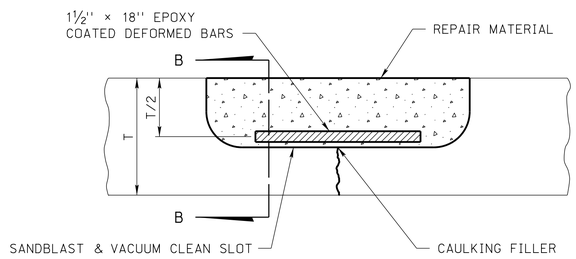

SECTION A-A

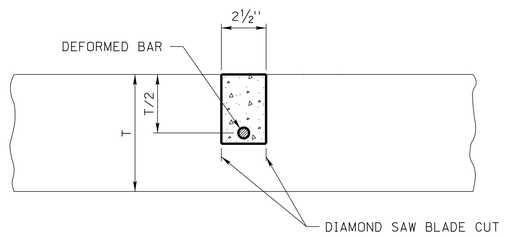

SECTION B-B

ROADWAY DESIGN DIVISION
Computer: DRDESIGN147
User: dor13017
Date: 18-APR-2016 09:10
File: 32905e05.dgn
Scale: 1:100
SHEET 1 OF 2

THIS PLAN IS DRAWN AT 100 SCALE.

PROJECT NO.	SHEET NO.

C.N.

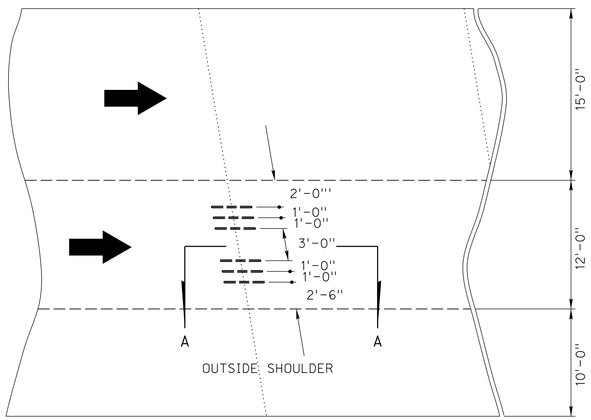

NOTE: SKEWED TRANSVERSE JOINT SPACING AT 16'-6"

RETROFIT DOWEL BAR SPACING

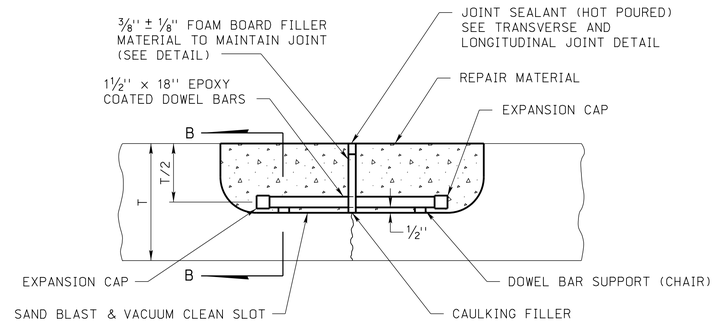

SECTION A-A

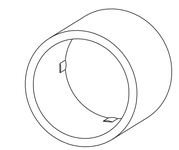

EXPANSION CAP

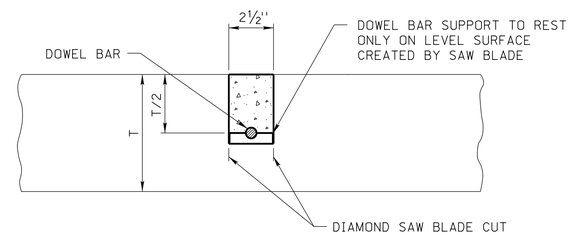

SECTION B-B

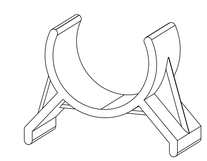

DOWEL BAR SUPPORT (CHAIR)

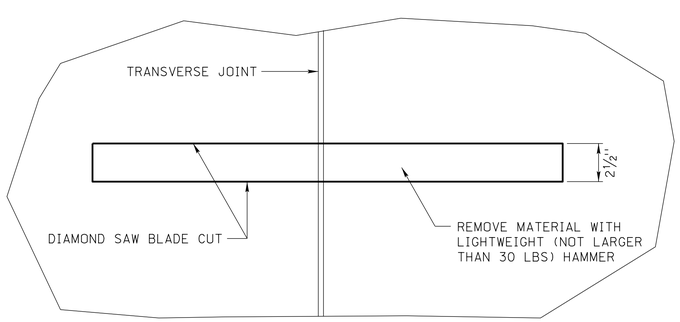

PLAN VIEW DOWEL BAR RETROFIT SLOT MATERIAL REMOVAL

NOTE:
THE 12'-0" DRIVING LANE WHERE THE DOWEL BAR RETROFIT IS PLACED SHALL BE SAWED AND SEALED ACCORDING TO THE TRANSVERSE JOINT DETAIL.

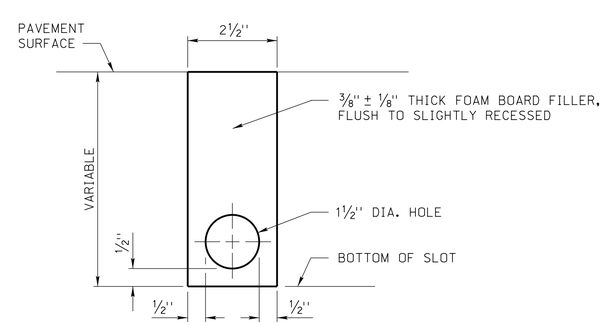

FOAM BOARD FILLER DETAIL

ROADWAY DESIGN DIVISION

Computer: DRDESIGN147

User: dor13017

Date: 18-APR-2016 09:10

File: 3290Se05.dgn

SHEET 2 OF 2

SCALE: 2:100

THIS PLAN IS DRAWN AT 100 SCALE.

PROJECT NO.	SHEET NO.

C.N.

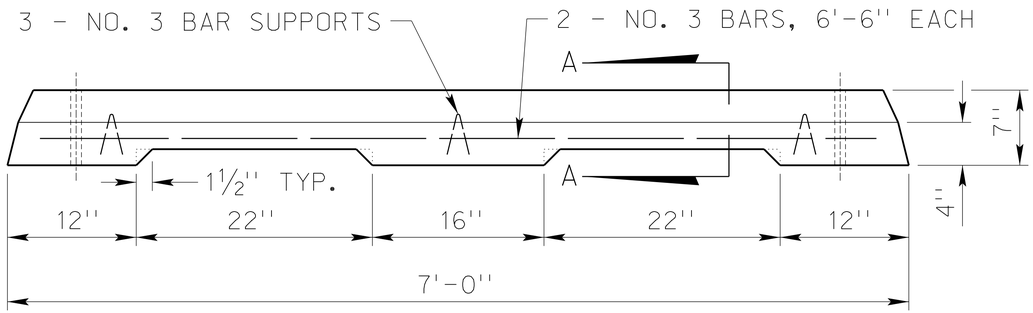

ELEVATION

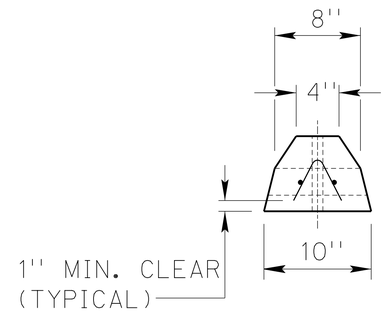

SECTION A-A

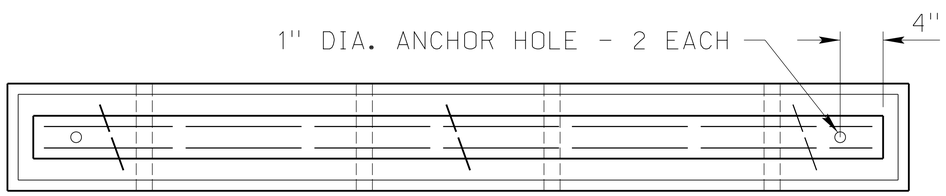

NOTE: PRECAST CONCRETE CURB STOP SHALL BE ANCHORED WITH NO. 7 BARS 18'' IN LENGTH

PLAN

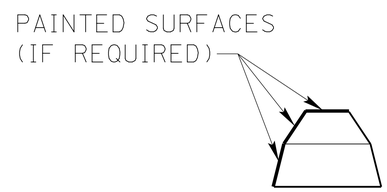

PAINTING DETAIL

DETAIL OF PRECAST CONCRETE CURB STOP

THIS PLAN IS DRAWN AT 100 SCALE.

ROADWAY DESIGN DIVISION
Computer: DRDESIGN147
User: dor13017
Date: 18-APR-2016 09:10
File: 38105e01.dgn
Scale: 1:100
SHEET 1 OF 1

PROJECT NO.	SHEET NO.

C.N.

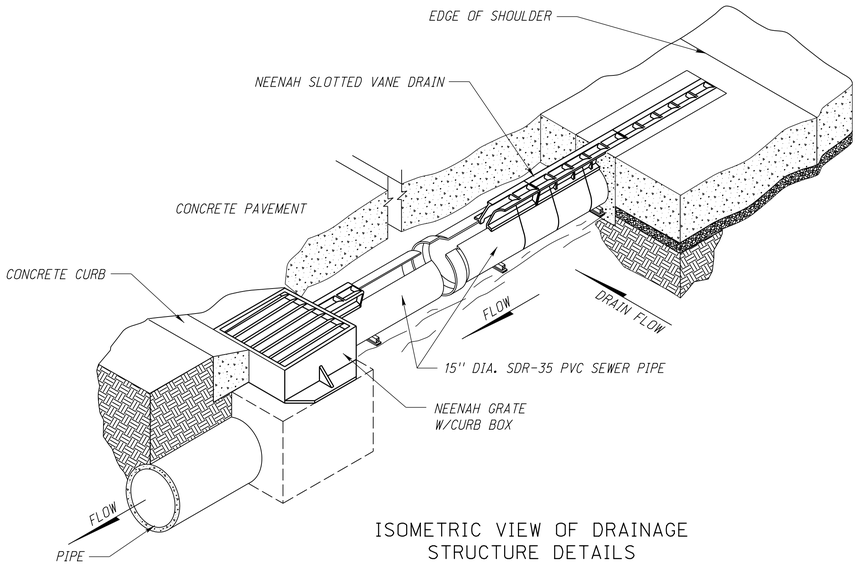

ISOMETRIC VIEW OF DRAINAGE
STRUCTURE DETAILS
STA. ****

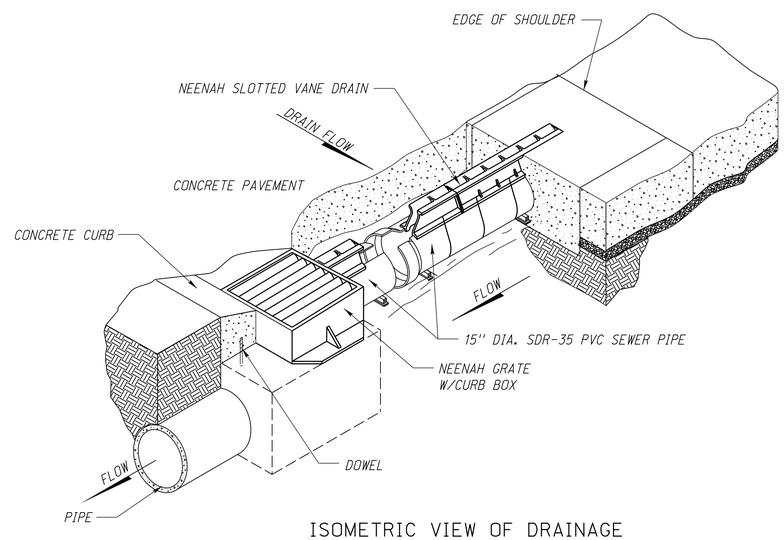

ISOMETRIC VIEW OF DRAINAGE
STRUCTURE DETAILS
STA. ****

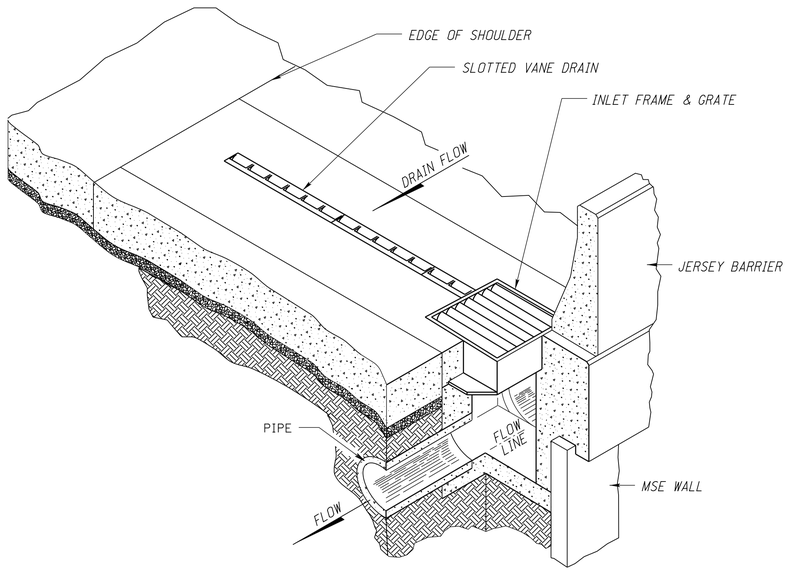

ISOMETRIC VIEW OF DRAINAGE
STRUCTURE DETAILS
STA. ****

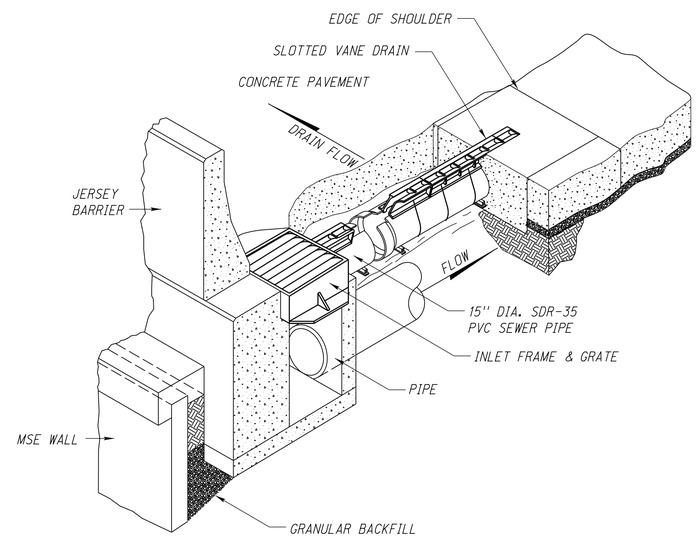

ISOMETRIC VIEW OF DRAINAGE
STRUCTURE DETAILS
STA. ****

ROADWAY DESIGN DIVISION
Computer: DRDESIGN147
User: dcr13017
Date: 18-APR-2016 09:10
File: 41805e03.dgn
SHEET SCALE: 1:100

PROJECT NO.	SHEET NO.

C.N.

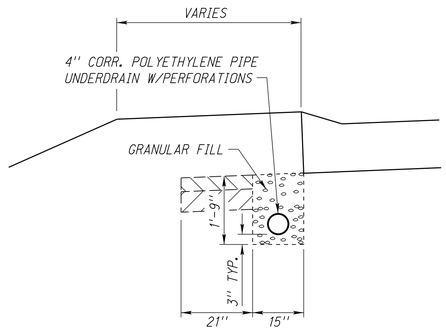

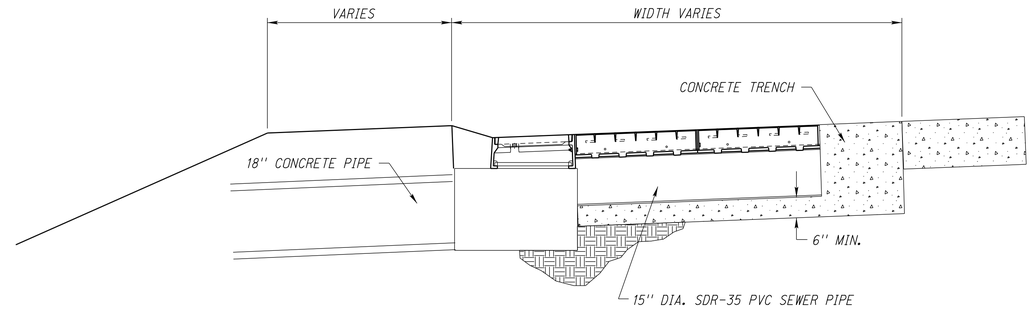

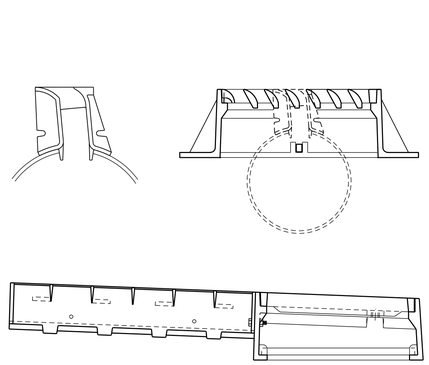

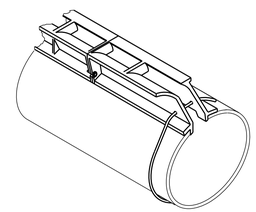

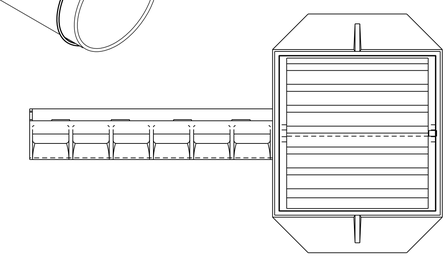

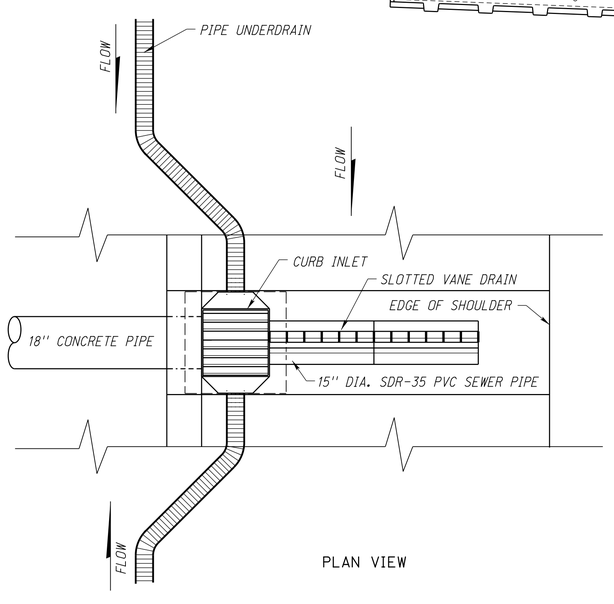

PLAN VIEW

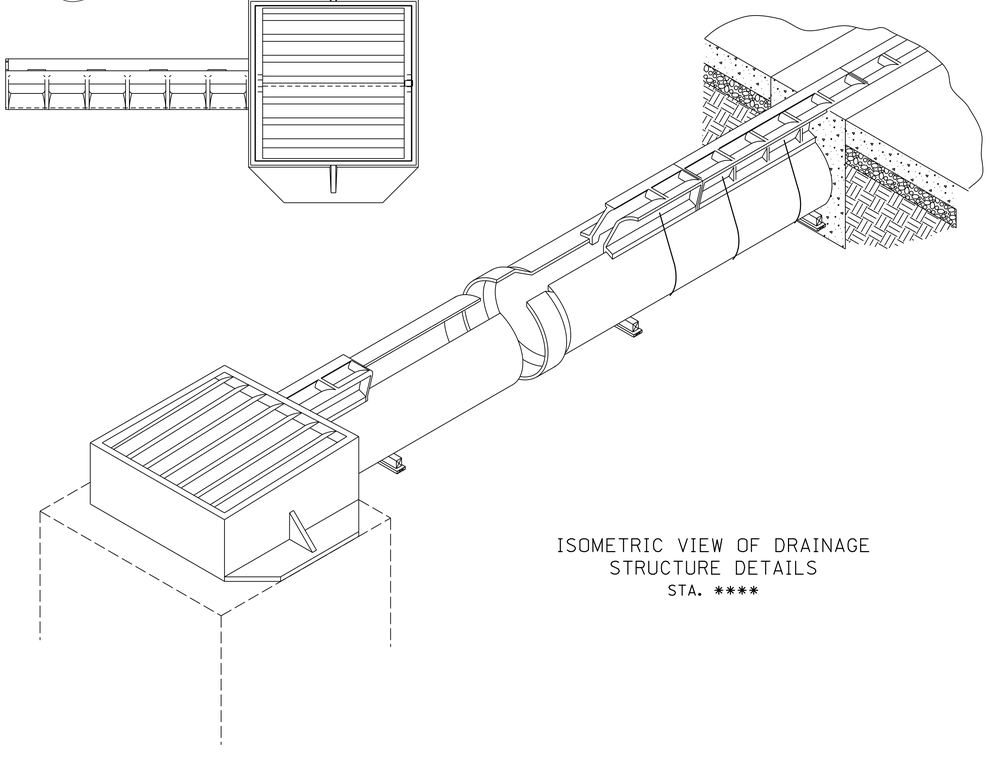

ISOMETRIC VIEW OF DRAINAGE
STRUCTURE DETAILS
STA. ****

ROADWAY DESIGN DIVISION

Computer: DRDESIGN147

User: dor13017

Date: 18-APR-2016 09:10

File: 41805e03.dgn
Scale: 1:100
SHEET 2 OF 3

PROJECT NO.	SHEET NO.

C.N.

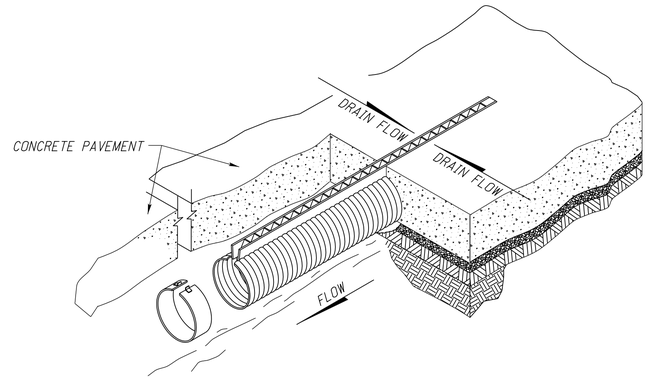

ISOMETRIC VIEW OF DRAINAGE
STRUCTURE DETAILS
STA. ****

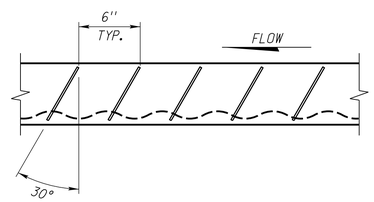

LONGITUDINAL SECTION
(THRU SLOT)

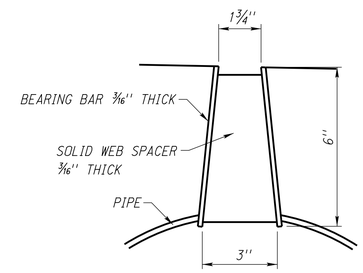

GRATE DETAIL

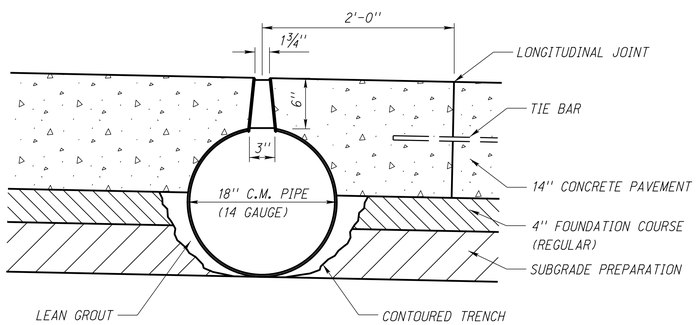

CORRUGATED METAL SLOTTED PIPE DETAIL
(CONCRETE PAVEMENT APPLICATION)

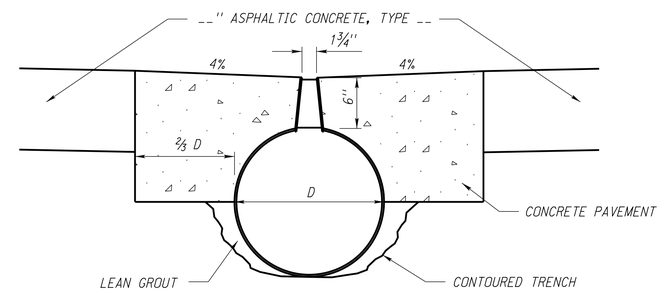

CORRUGATED METAL SLOTTED PIPE DETAIL
(ASPHALTIC CONCRETE PAVEMENT APPLICATION)

ROADWAY DESIGN DIVISION
Computer: DRDESIGN147
User: dor13017
Date: 18-APR-2016 09:10
File: 41805e03.dgn
Scale: 3:100
SHEET 5 OF 3

PROJECT NO.	SHEET NO.

C.N.

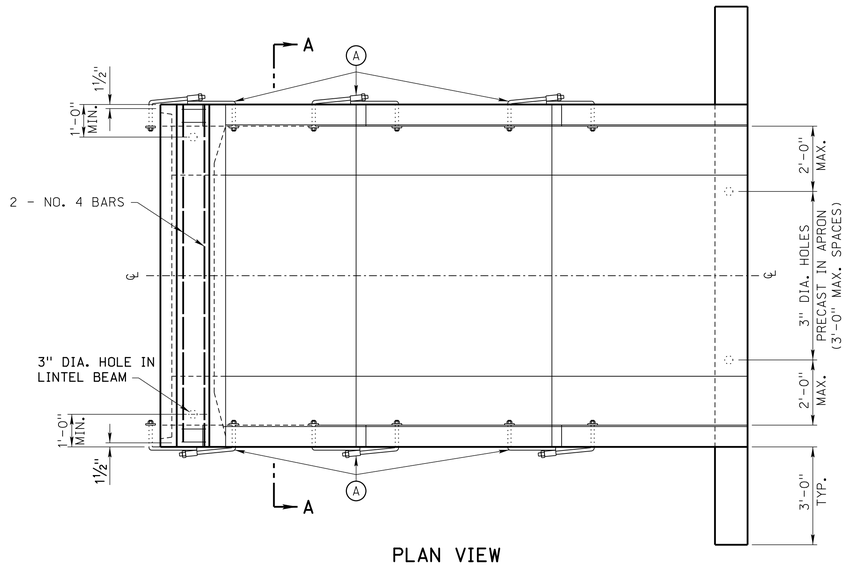

PLAN VIEW

NOTES:

THE NUMBER OF INDIVIDUAL SECTIONS USED TO MAKE UP A COMPLETE END SECTION MAY VARY, HOWEVER, NO ONE INDIVIDUAL SECTION WILL BE LESS THAN 4'-6" IN LENGTH.

S = 2.5 FOR BOX RISES UP TO 8', AND S = 2 FOR RISES IN EXCESS OF 8'.

X = 2'-0" FOR BOX RISES UP TO 8', AND X = 3'-0" FOR RISES IN EXCESS OF 8'.

THE STATE WILL BE FURNISHED, PRIOR TO FABRICATION, FIVE SETS OF ENGINEER APPROVED DRAWINGS. THE DRAWINGS WILL SHOW THE SHAPE, PLACEMENT AND SIZE OF STEEL.

CABLE LOOPS WILL BE PROVIDED, WHERE NECESSARY, FOR HANDLING PURPOSES.

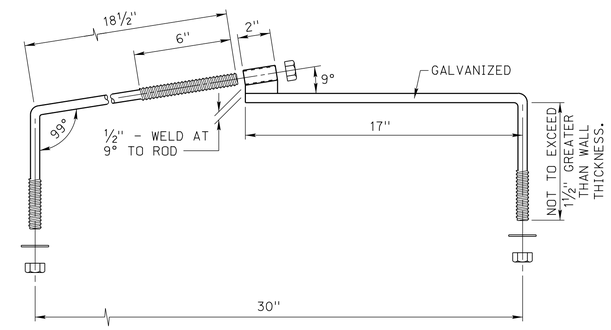

DETAIL OF CULVERT TIES
(OR APPROVED EQUAL)

Ⓐ CULVERT TIES (1" DIA. RODS)

Ⓑ 2'-4" FOR THE TONGUE END (INCLUDES THE 4" TONGUE)

Ⓒ 1" DIA. × 1'-0" STEEL DOWEL. 3" DIA. HOLE IN THE TOP OF THE WINGWALL. FILL HOLE TO TOP OF LINTEL BEAM WITH AN APPROVED GROUT.

Ⓓ ¾" DIA. HOLE 4'-0" ABOVE FLOWLINE AND APPROXIMATELY 6" FROM EDGES OF CONCRETE FOR FUTURE FENCE CONNECTION.

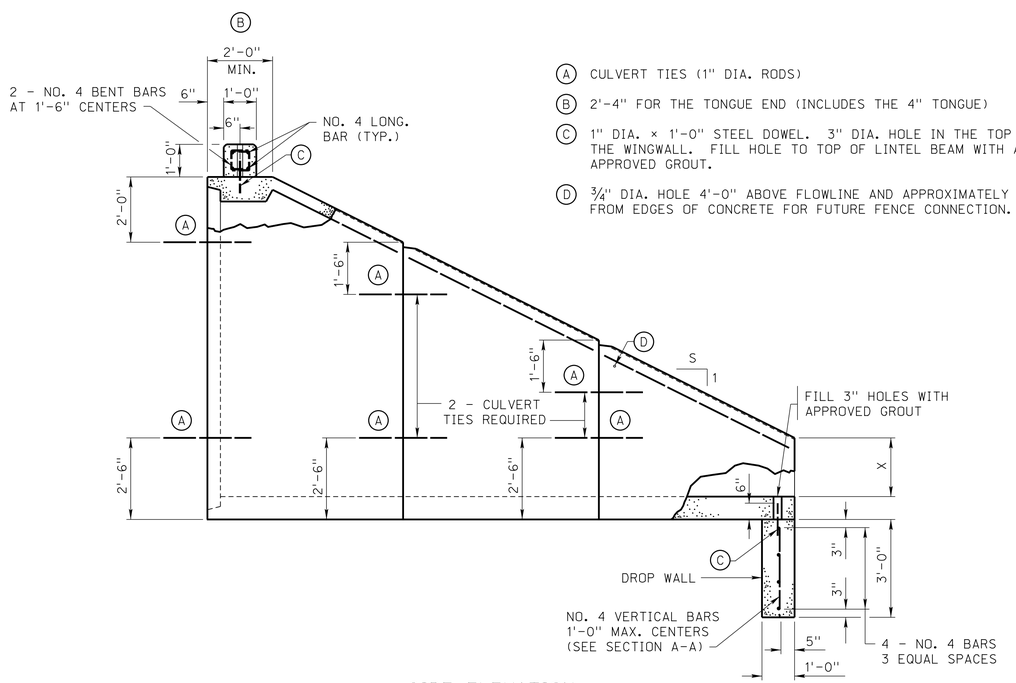

SIDE ELEVATION

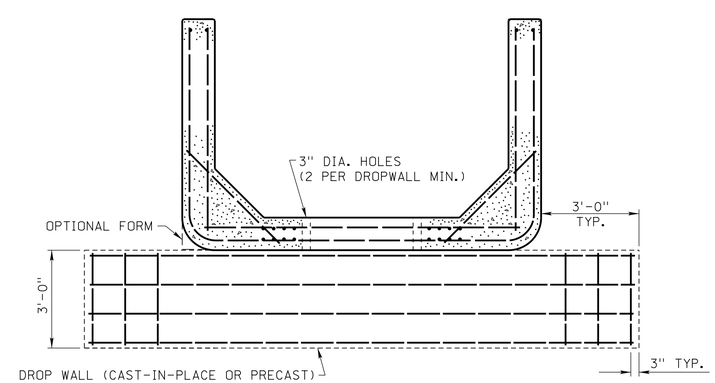

SECTION A-A

PRECAST CONCRETE BOX CULVERT END SECTION

THIS PLAN IS DRAWN AT 100 SCALE.

ROADWAY DESIGN DIVISION
Computer: DRDESIGN147
User: dor13017
Date: 18-APR-2016 09:10
File: 42205e00.dgn
Scale: 1:100
SHEET 1 OF 1

PROJECT NO.	SHEET NO.

C.N.

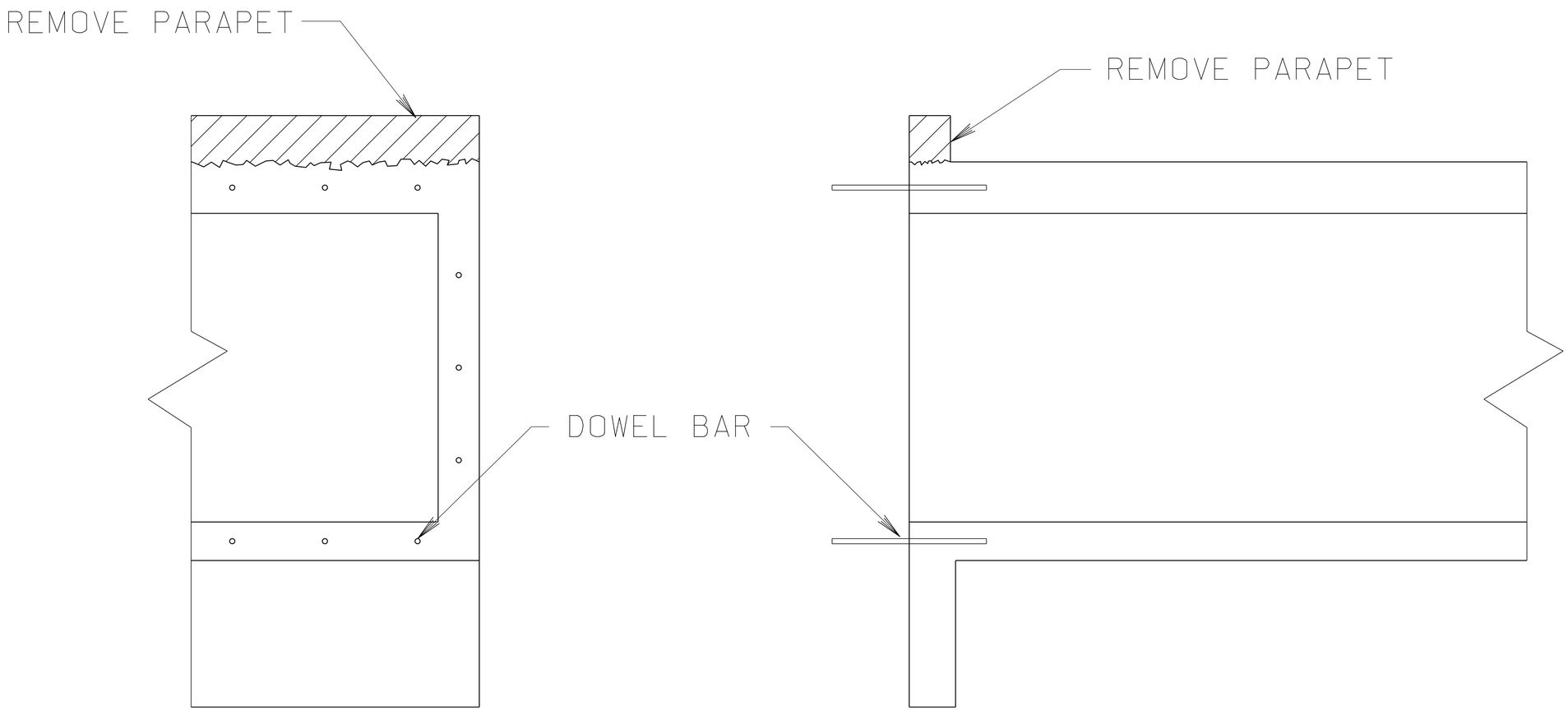

Note: All Dowel Bars are No. 6 Bars x 2'-6'' Placed at
18'' Centers and Perpendicular to the Surface to be Extended.
Place Dowels in 1½'' Holes and Grout Full.

PREPARATION OF EXISTING BOX CULVERT FOR EXTENTION

THIS PLAN IS DRAWN AT 100 SCALE.

ROADWAY DESIGN DIVISION
Computer: DRDESIGN147
User: dor13017
Date: 18-APR-2016 09:10
File: 42305e01.dgn
Scale: 1:100
SHEET 1 OF 1

PROJECT NO.	SHEET NO.

C.N.

View 1

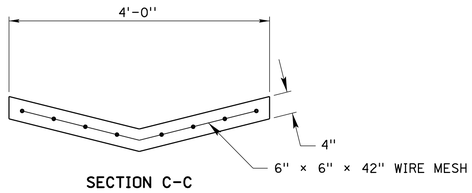

SECTION C-C

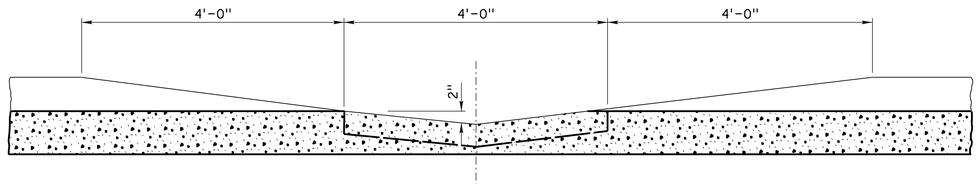

SECTION A-A

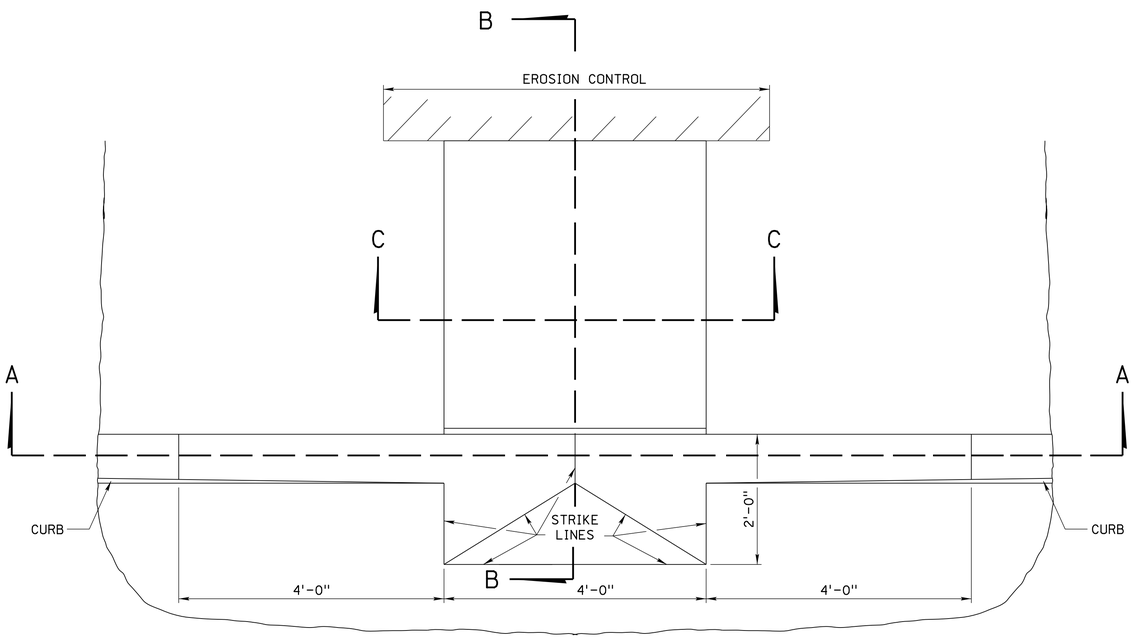

PLAN

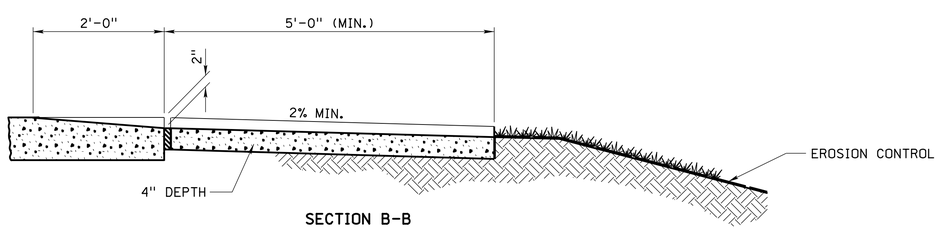

SECTION B-B

DETAILS OF DROP CURB FOR DRAINAGE

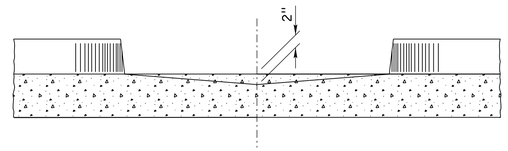

SECTION A-A

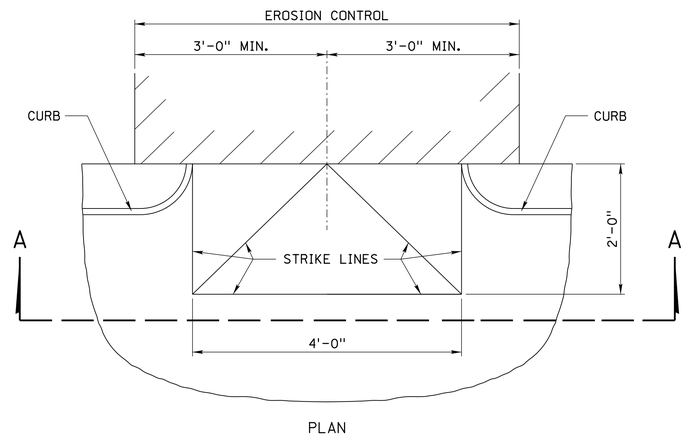

PLAN

DETAILS OF DROP CURB FOR DRAINAGE

View 2

THIS PLAN IS DRAWN AT 100 SCALE.

ROADWAY DESIGN DIVISION
Computer: DRDESIGN147
User: dor13017
Date: 18-APR-2016 09:10
File: 43405e01.dgn
Scale: 1:100
SHEET 1 OF 1

PROJECT NO.	SHEET NO.

C.N.

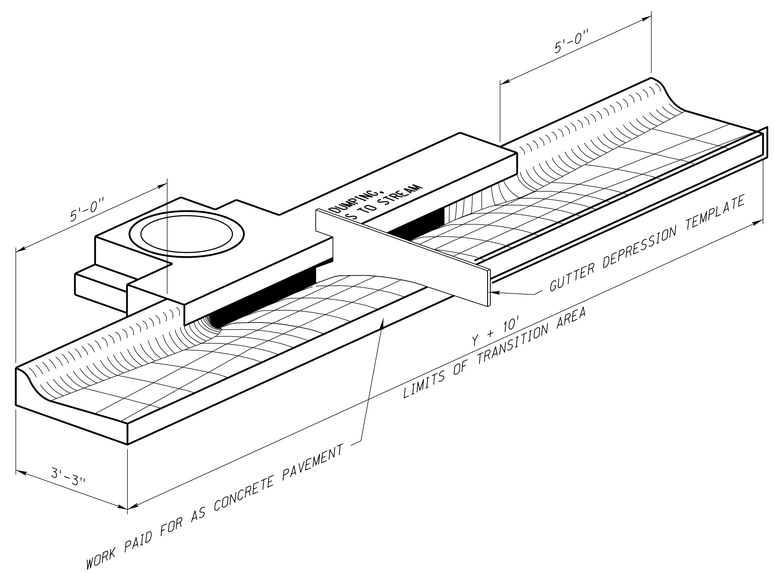

CURB INLET DEPRESSION

ROADWAY DESIGN DIVISION

Computer: DRDESIGN147

User: dor13017

Date: 18-APR-2016 09:10

File: 44305e00.dgn
Scale: 1:100
SHEET 1 OF 1

THIS PLAN IS DRAWN AT 100 SCALE.

PROJECT NO.	SHEET NO.

C.N.

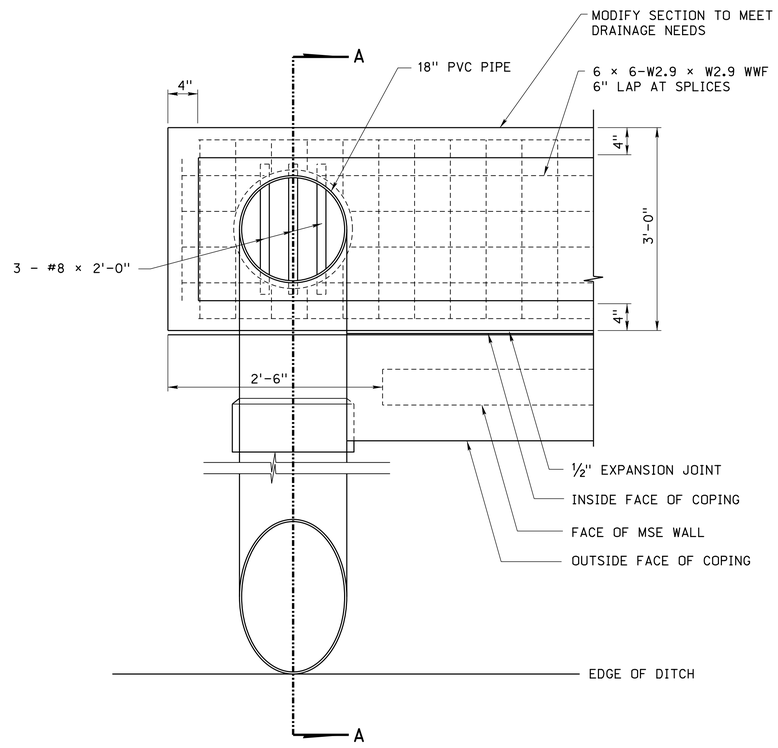

CONCRETE FLUME AT END OF MSE WALL DETAIL

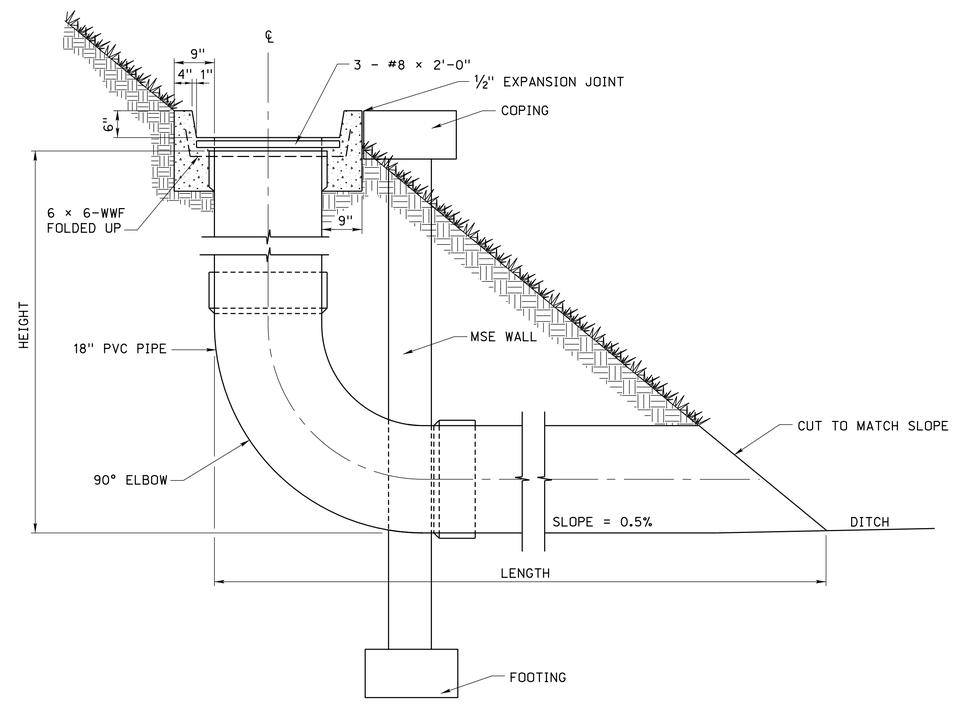

CONCRETE FLUME SECTION A-A

MSE WALL V-DITCH DRAIN

ROADWAY DESIGN DIVISION

Computer: DRDESIGN147

User: dor13017

Date: 18-APR-2016 09:11

File: 44405e00.dgn

Scale: 1:100

SHEET 1 OF 1

THIS PLAN IS DRAWN AT 100 SCALE.

PROJECT NO.	SHEET NO.

C.N.

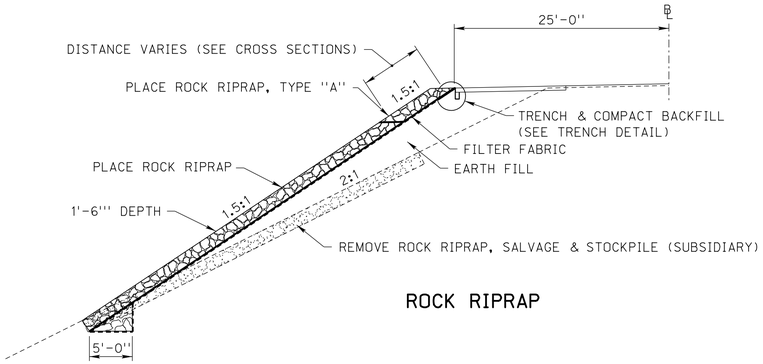

ROCK RIPRAP

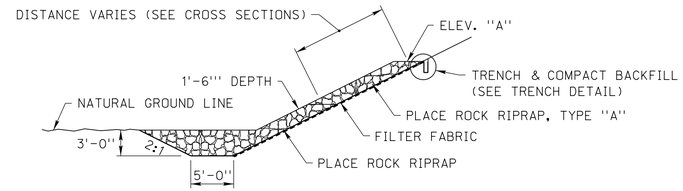

ROCK RIPRAP

STATION	TO	STATION	SIDE	ELEV. "A"
*		*	*	*

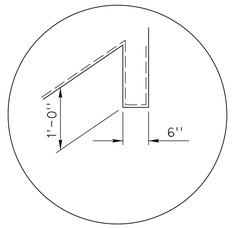

TRENCH DETAIL

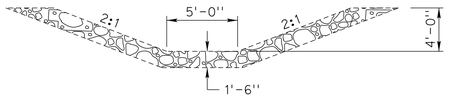

EXISTING

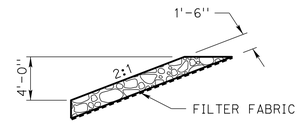

STA. * TO STA.*

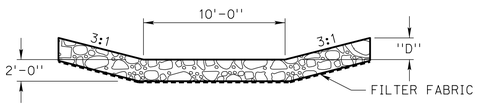

STATION	TO	STATION	SIDE	"D"
*		*	*	*

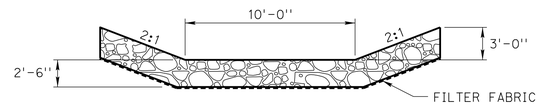

STA. * TO STA.*

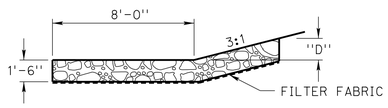

STATION	TO	STATION	SIDE	"D"
*		*	*	*

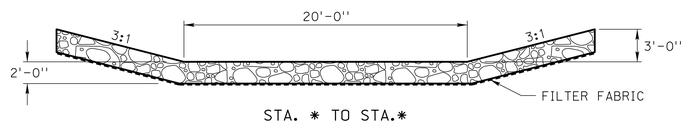

STA. * TO STA.*

DETAILS OF ROCK RIPRAP

ROADWAY DESIGN DIVISION

Computer: DRDESIGN147

User: dor13017

Date: 18-APR-2016 09:11

File: 45005e01.dgn
Scale: 1:100
SHEET 1 OF 1

THIS PLAN IS DRAWN AT 100 SCALE.

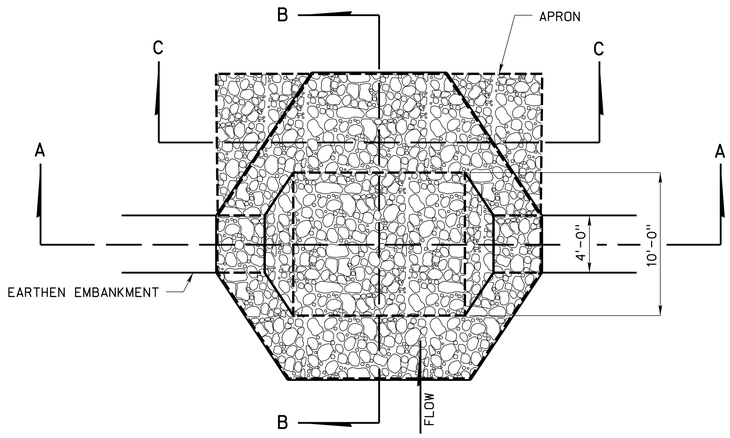

PLAN VIEW

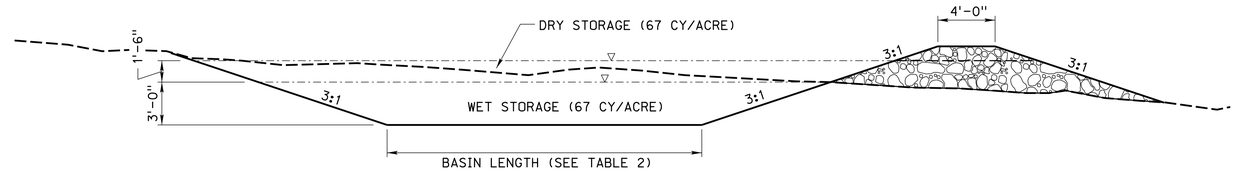

SECTION D-D

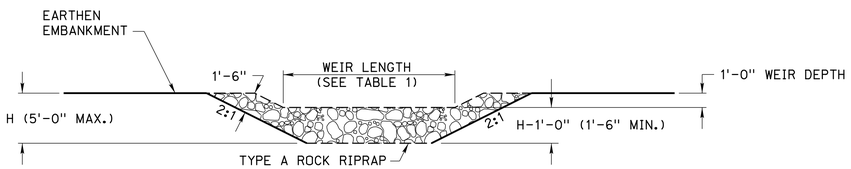

SECTION A-A
(3'-0" DEPTH SHOWN)

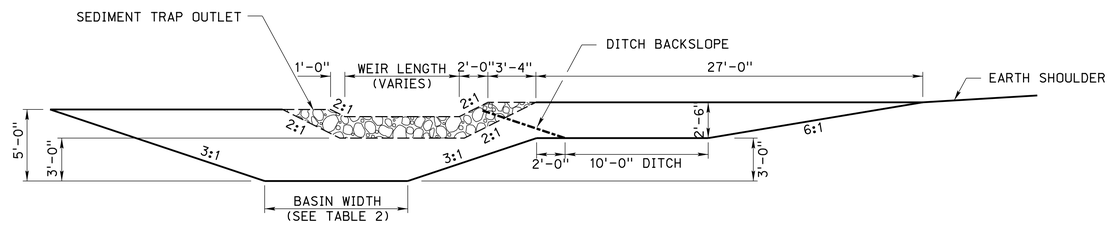

SECTION E-E

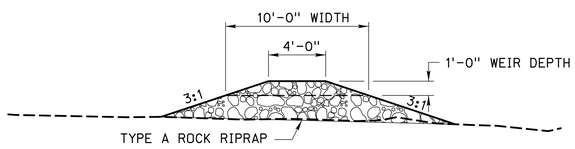

SECTION B-B

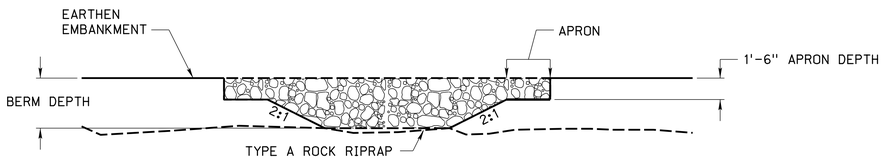

SECTION C-C

CONTRIBUTING DRAINAGE AREA	BASIN LENGTH (FT.)	BASIN WIDTH (FT.)
1 ACRE	22	10
2 ACRE	40	16
3 ACRE	58	23
4 ACRE	73	28
5 ACRE	85	34

TABLE 2

TYPICAL ROADSIDE DITCH SEDIMENT TRAP BASIN

CONTRIBUTING DRAINAGE AREA	WEIR LENGTH (FT.)
1 ACRE	4
2 ACRE	5
3 ACRE	6
4 ACRE	10
5 ACRE	12

TABLE 1

SEDIMENT TRAP OUTLET

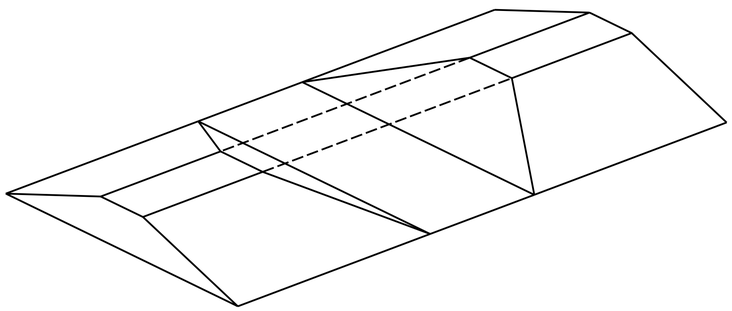

DITCH DIKE WITH CUTOUT FOR OUTLET

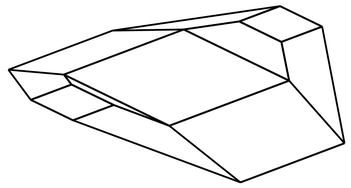

ROCK RIPRAP OUTLET

ROADSIDE SEDIMENT TRAP AND OUTLET

ROADWAY DESIGN DIVISION
Computer: DRDESIGN147
User: dor13017
Date: 18-APR-2016 09:11
File: 45055e00.dgn
Scale: 1:100
SHEET 1 OF 2

PROJECT NO.	SHEET NO.

C.N.

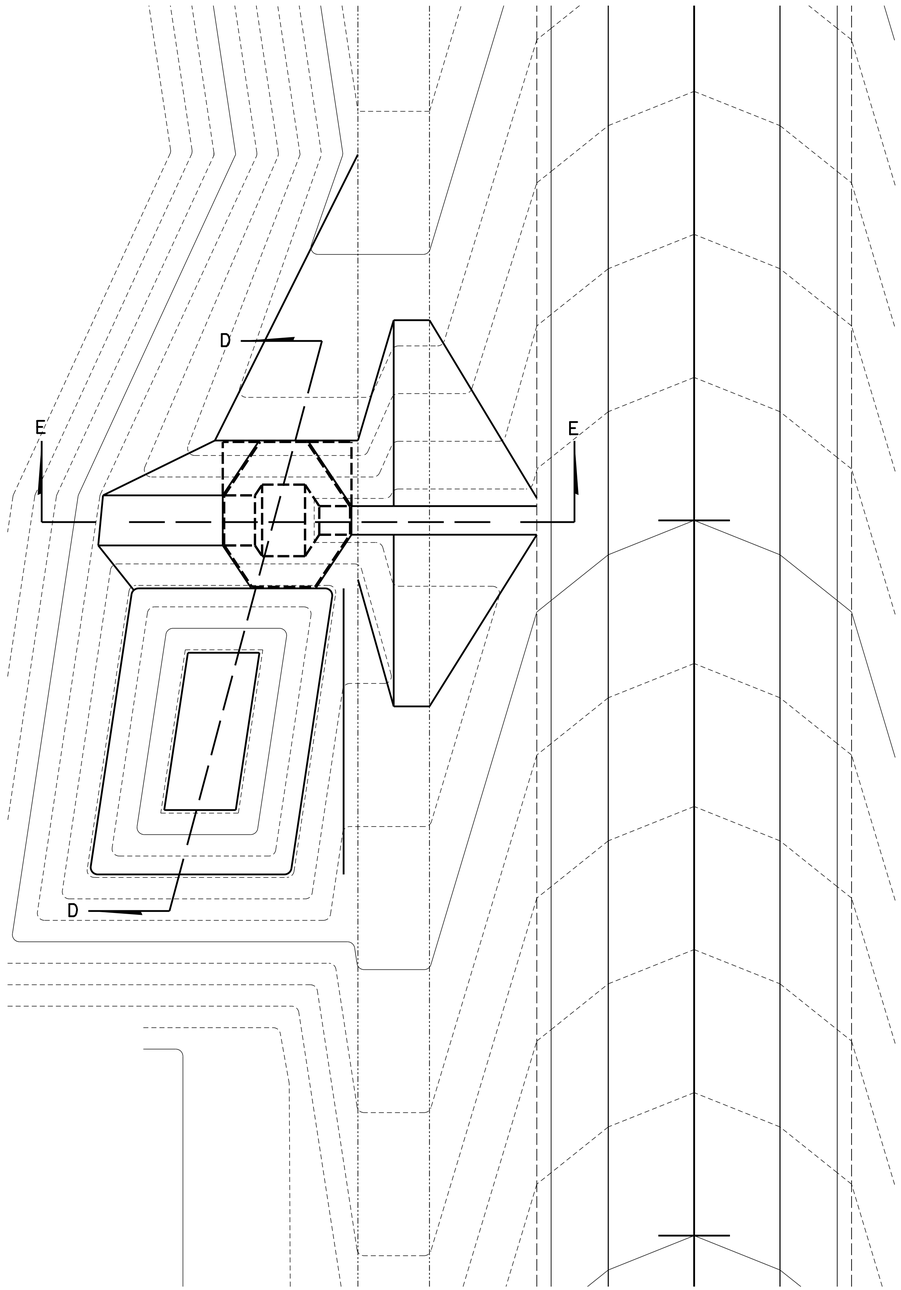

TYPICAL ROADSIDE DITCH APPLICATION

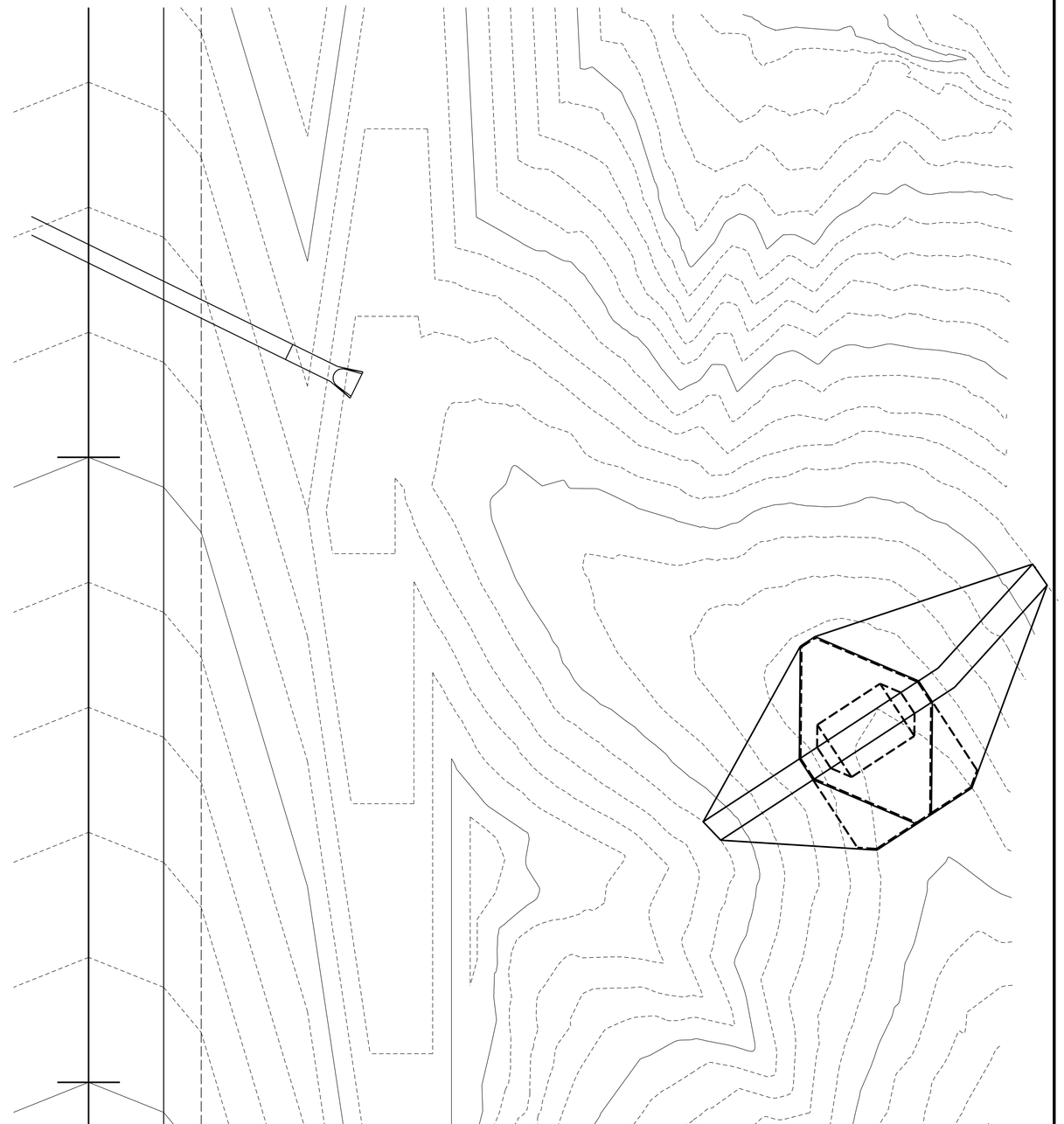

TYPICAL OUTLET SWALE APPLICATION

ROADSIDE SEDIMENT TRAP AND OUTLET

ROADWAY DESIGN DIVISION
Computer: DRDESIGN147
User: dor13017
Date: 18-APR-2016 09:11
File: 45055e00.dgn
SCALE: 1:100
SHEET 2 OF 2

PROJECT NO.	SHEET NO.

C.N.

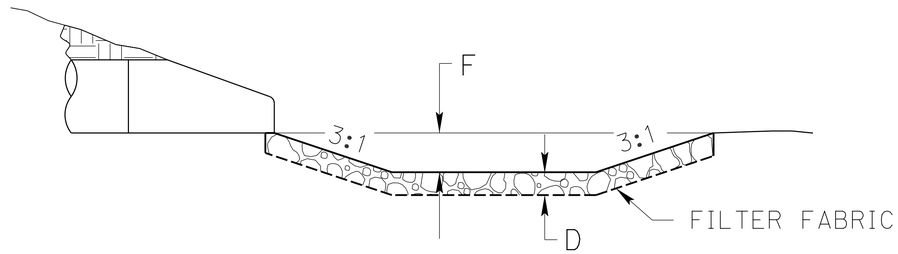

SECTION A-A

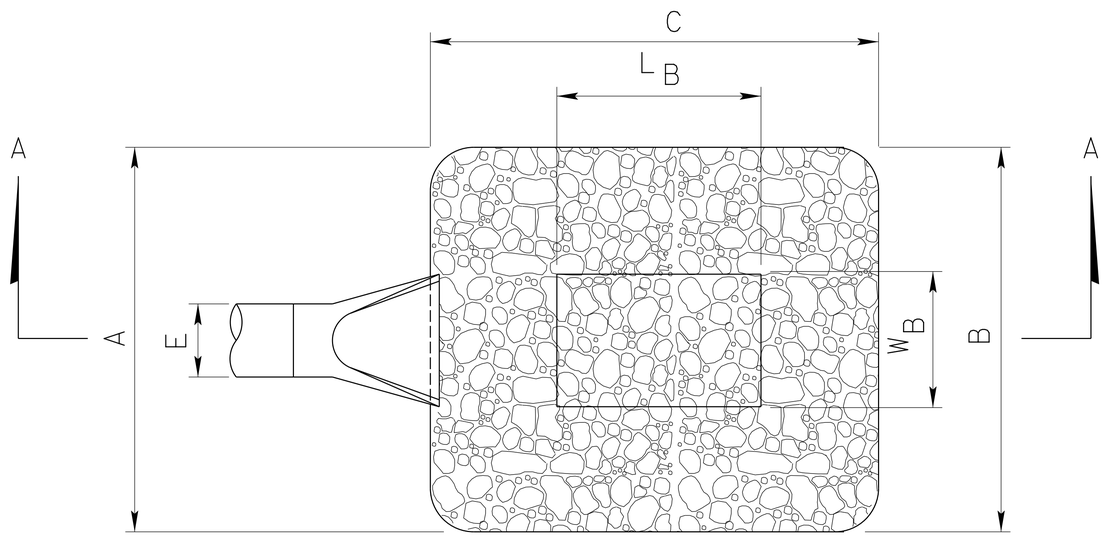

PLAN

DETAIL OF ROCK RIPRAP SCOUR HOLE

BUILD ROCK RIPRAP SCOUR HOLE											
STATION	A	B	C	D	E	F	W_B	L_B	TONS	RIPRAP TYPE	FILTER FABRIC SQ. YDS.
*	*	*	*	*	*	*	*	*	*	*	*
*	*	*	*	*	*	*	*	*	*	*	*
*	*	*	*	*	*	*	*	*	*	*	*

* FOR DIMENSIONS USE EQUATIONS IN CHAPTER 2 OF DRAINAGE DESIGN AND EROSION CONTROL MANUAL.

ROADWAY DESIGN DIVISION
Computer: DRDESIGN147
User: dor13017
Date: 18-APR-2016 09:11
File: 45105a02.dgn
Scale: 1:100
SHEET 1 OF 3

PROJECT NO.	SHEET NO.

C.N.

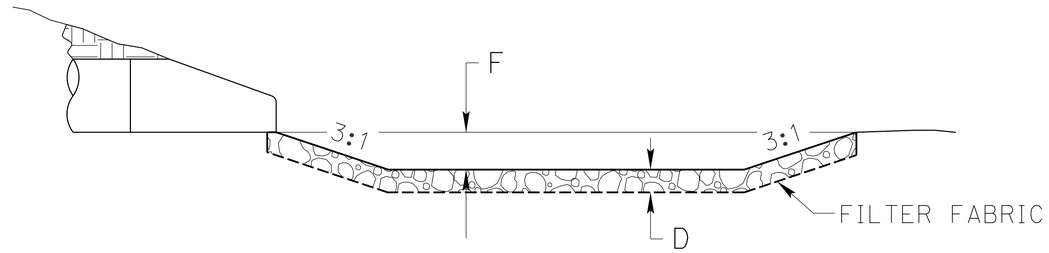

SECTION A-A

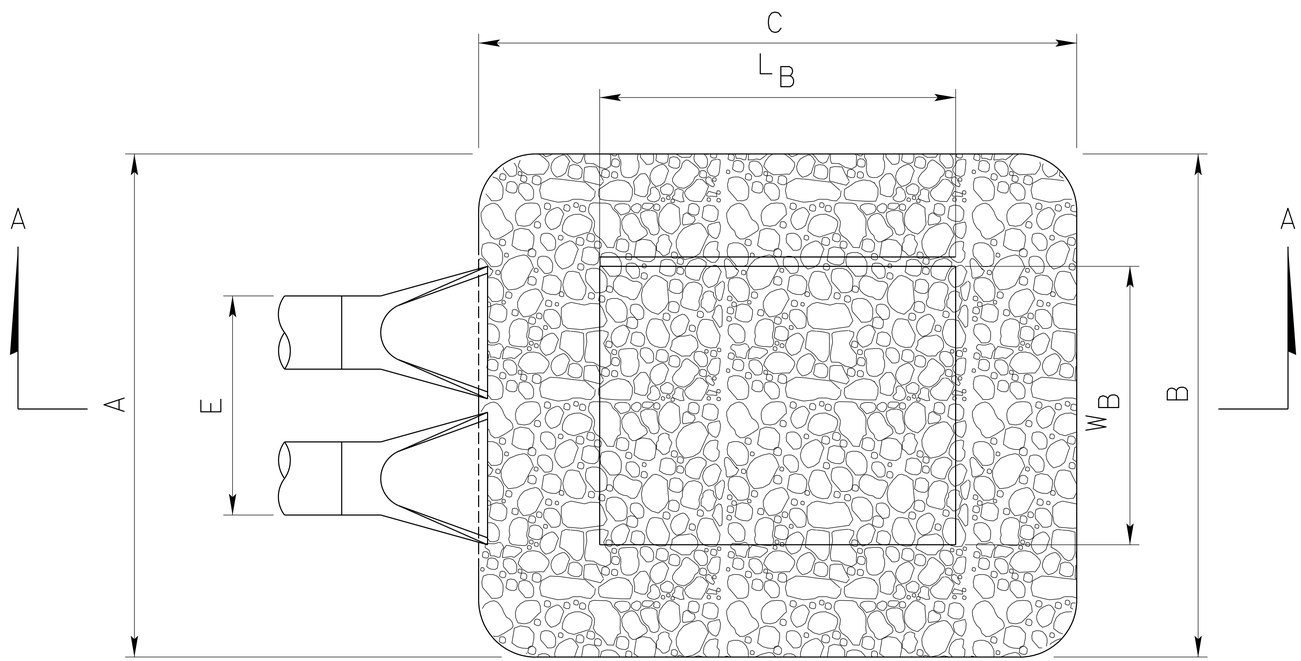

PLAN

NOTES:
WHEN MULTIPLE PIPES W/FLARED END SECTIONS ARE USED, WIDTH OF BASIN (W_B) MUST BE AT LEAST EQUAL TO THE DISTANCE BETWEEN THE OUTSIDE EDGES OF THE FLARED END SECTIONS.

DETAIL OF ROCK RIPRAP SCOUR HOLE

BUILD ROCK RIPRAP SCOUR HOLE											
STATION	A	B	C	D	E	F	W_B	L_B	TONS	RIPRAP TYPE	FILTER FABRIC SQ. YDS.
*	*	*	*	*	*	*	*	*	*	*	*
*	*	*	*	*	*	*	*	*	*	*	*
*	*	*	*	*	*	*	*	*	*	*	*

* FOR DIMENSIONS USE EQUATIONS IN CHAPTER 2 OF DRAINAGE DESIGN AND EROSION CONTROL MANUAL.

ROADWAY DESIGN DIVISION
Computer: DRDESIGN147
User: dor13017
Date: 18-APR-2016 09:11
File: 45105e02.dgn
Scale: 1:100
SHEET 2 OF 3

PROJECT NO.	SHEET NO.

C.N.

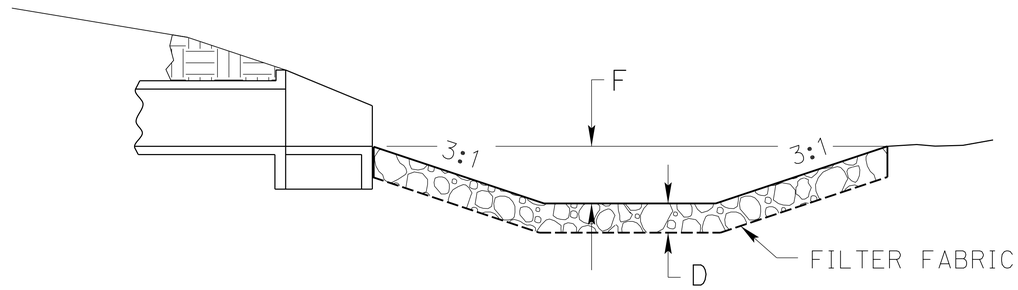

SECTION A-A

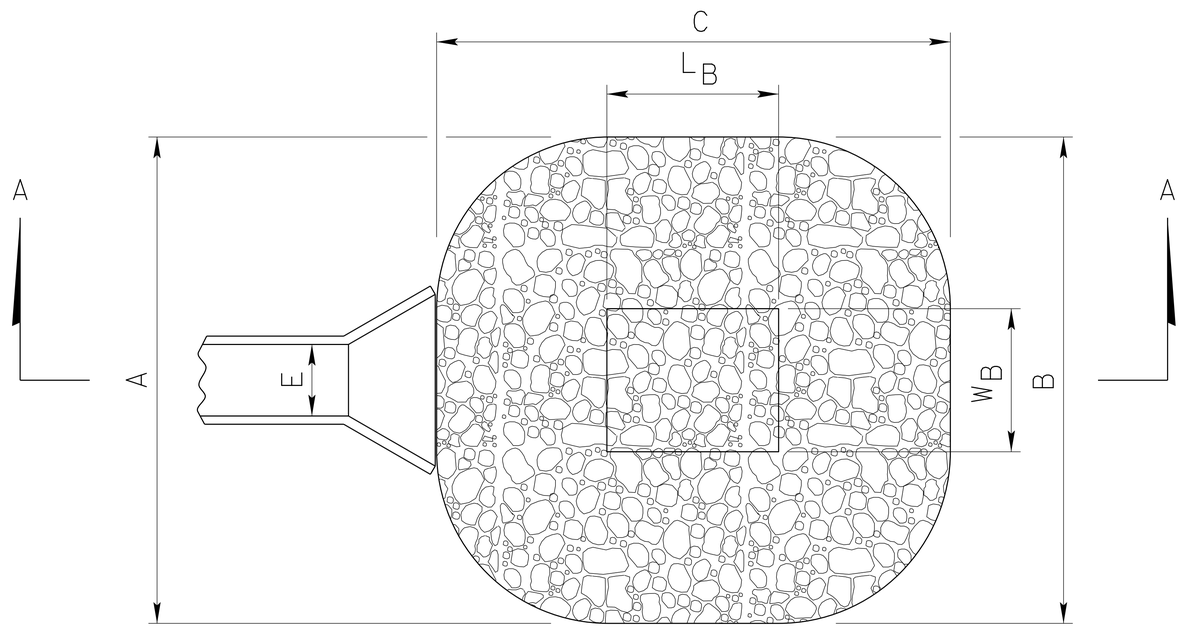

PLAN

NOTES:
WHEN PLACING RIPRAP BASIN AT OUTLET OF BOX CULVERT, PAVE THE APRON BETWEEN THE WINGWALLS W/3-5 FOOT CUTOFF WALL/FOOTING.

DETAILS OF ROCK RIPRAP SCOUR HOLE

BUILD ROCK RIPRAP SCOUR HOLE											
STATION	A	B	C	D	E	F	W_B	L_B	TONS	RIPRAP TYPE	FILTER FABRIC SQ. YDS.
*	*	*	*	*	*	*	*	*	*	*	*
*	*	*	*	*	*	*	*	*	*	*	*
*	*	*	*	*	*	*	*	*	*	*	*

* FOR DIMENSIONS USE EQUATIONS IN CHAPTER 2 OF DRAINAGE DESIGN AND EROSION CONTROL MANUAL.

ROADWAY DESIGN DIVISION
Computer: DRDESIGN147
User: dor13017
Date: 18-APR-2016 09:11
File: 45105e02.dgn
Scale: 1:100
SHEET 3 OF 3

PROJECT NO.	SHEET NO.

C.N.

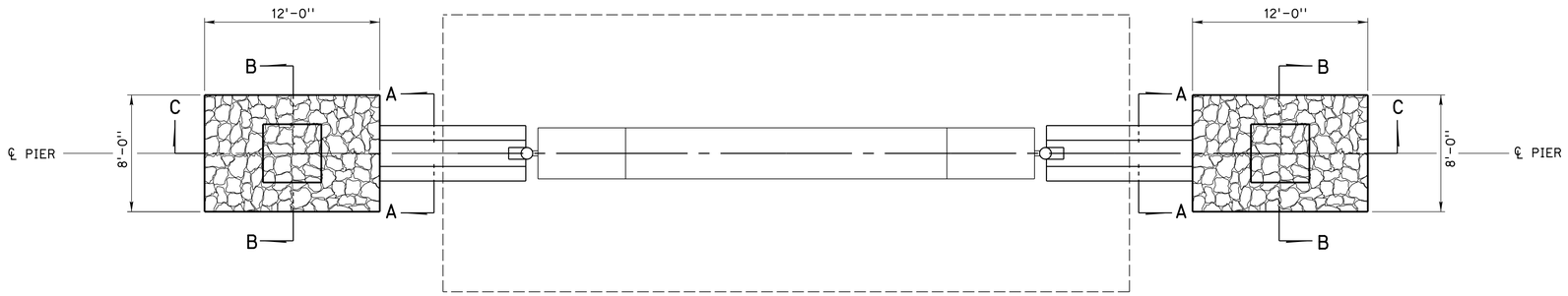

PLAN VIEW

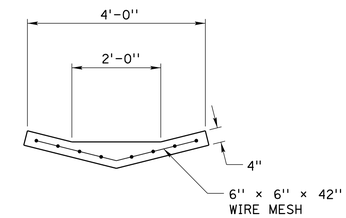

SECTION A-A

CONCRETE DITCH LINER

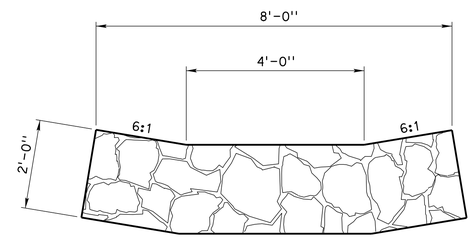

SECTION B-B

DETAIL OF BROKEN CONCRETE RIPRAP

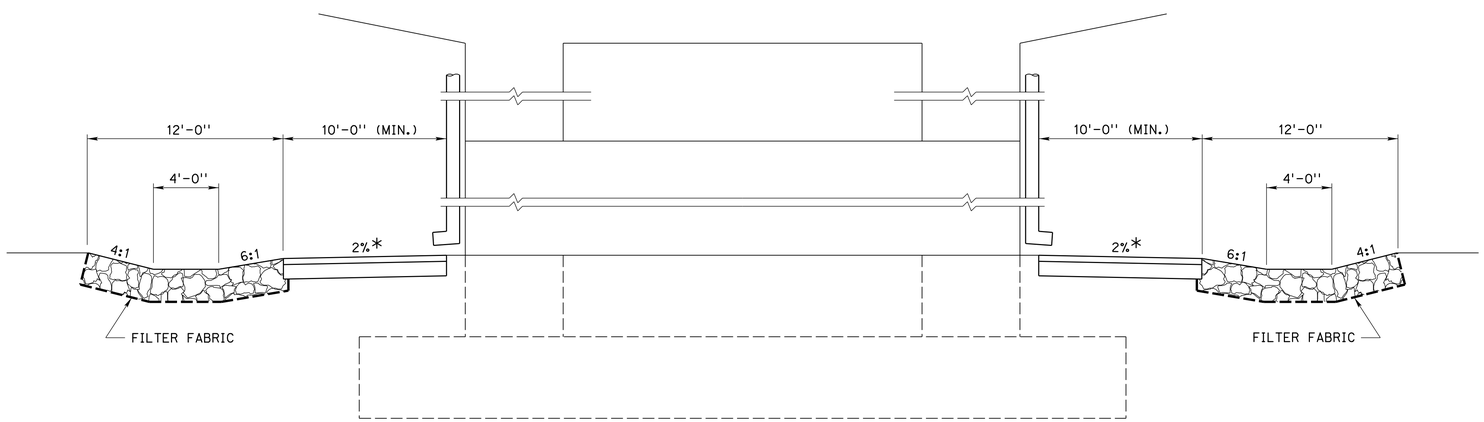

SECTION C-C

*AT SLOPES STEEPER THAN 2% THE DITCH LINER WILL EXTEND TO THE BREAK IN THE GRADE.

QUANTITIES PER DRAINAGE BASIN
BROKEN CONCRETE RIPRAP = 9.6 TON

BRIDGE DRAINAGE BASIN

THIS PLAN IS DRAWN AT 100 SCALE.

ROADWAY DESIGN DIVISION

Computer: DRDESIGN147

User: dor13017

Date: 18-APR-2016 09:11

File: 45205e01.dgn
Scale: 1:100
SHEET 1 OF 1

PROJECT NO.	SHEET NO.

C.N.

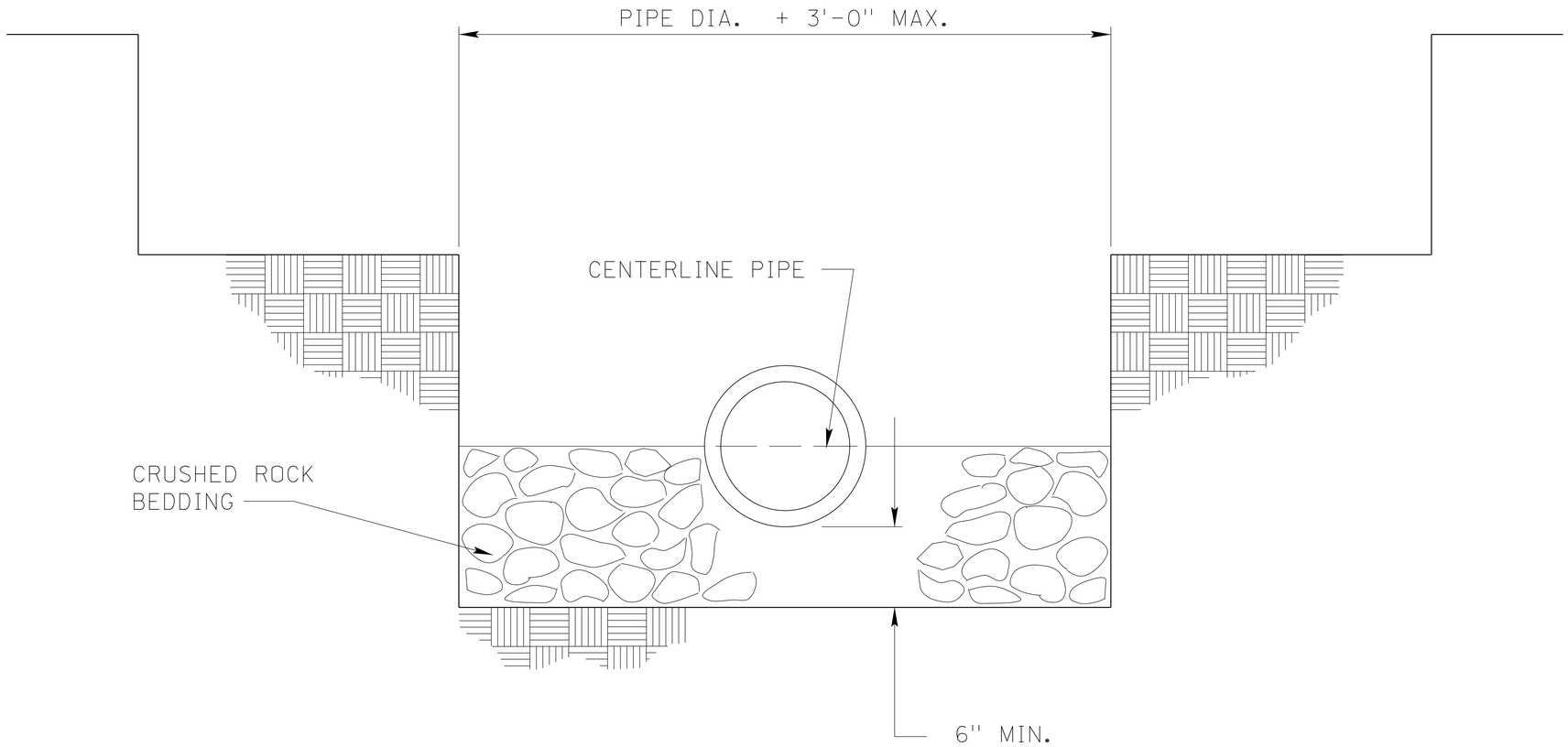

PIPE BEDDING DETAIL
FOR PIPES LARGER THAN 15" DIAMETER

THIS PLAN IS DRAWN AT 100 SCALE.

ROADWAY DESIGN DIVISION
Computer: DRDESIGN147
User: dor13017
Date: 18-APR-2016 09:11
File: 48105e00.dgn
Scale: 1:100
SHEET 1 OF 1

PROJECT NO.	SHEET NO.

C.N.

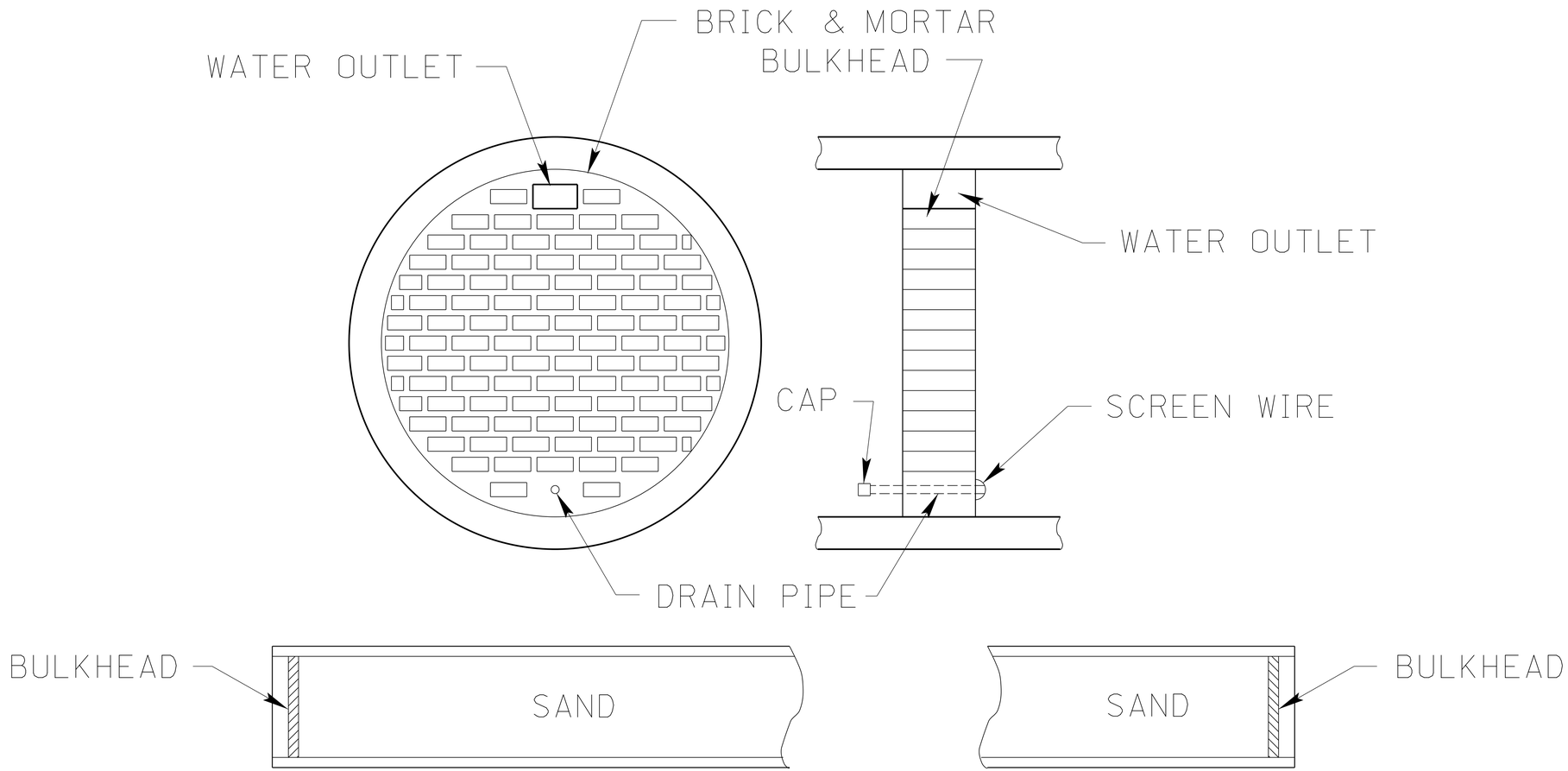

PLAN FOR SANDFILLING CULVERTS

(FOR INFORMATION ONLY)

THIS PLAN IS DRAWN AT 300 SCALE.

ROADWAY DESIGN DIVISION
Computer: DRDESIGN147
User: dor13017
Date: 18-APR-2016 09:11
File: 48805e01.dgn
Scale: 1:100
SHEET 1 OF 1

PROJECT NO.	SHEET NO.

C.N.

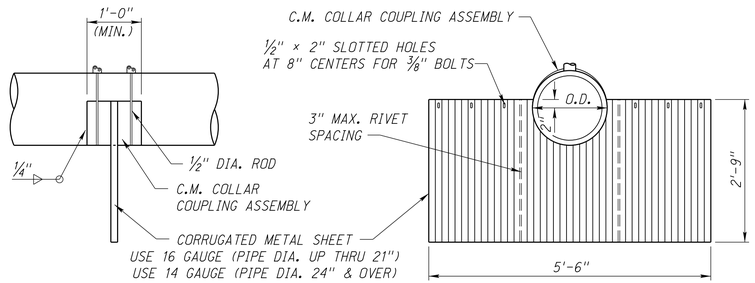

SECTION

ELEVATION OF ASSEMBLED DIAPHRAGM

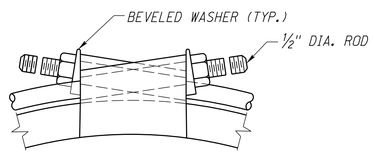

ELEVATION

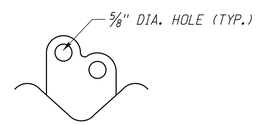

END VIEW

STANDARD TANK LUG DETAILS

METAL DIAPHRAGM DETAILS

ROADWAY DESIGN DIVISION
Computer: DRDESIGN147
User: dor13017
Date: 18-APR-2016 09:11
File: 54005e00.dgn
Scale: 1:100

THIS PLAN IS DRAWN AT 100 SCALE.

PROJECT NO.	SHEET NO.

C.N.

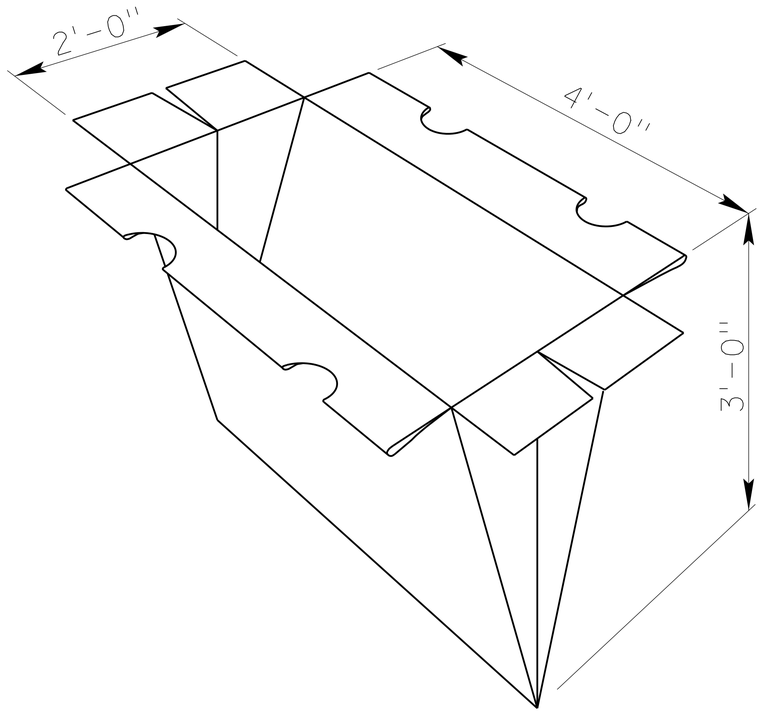

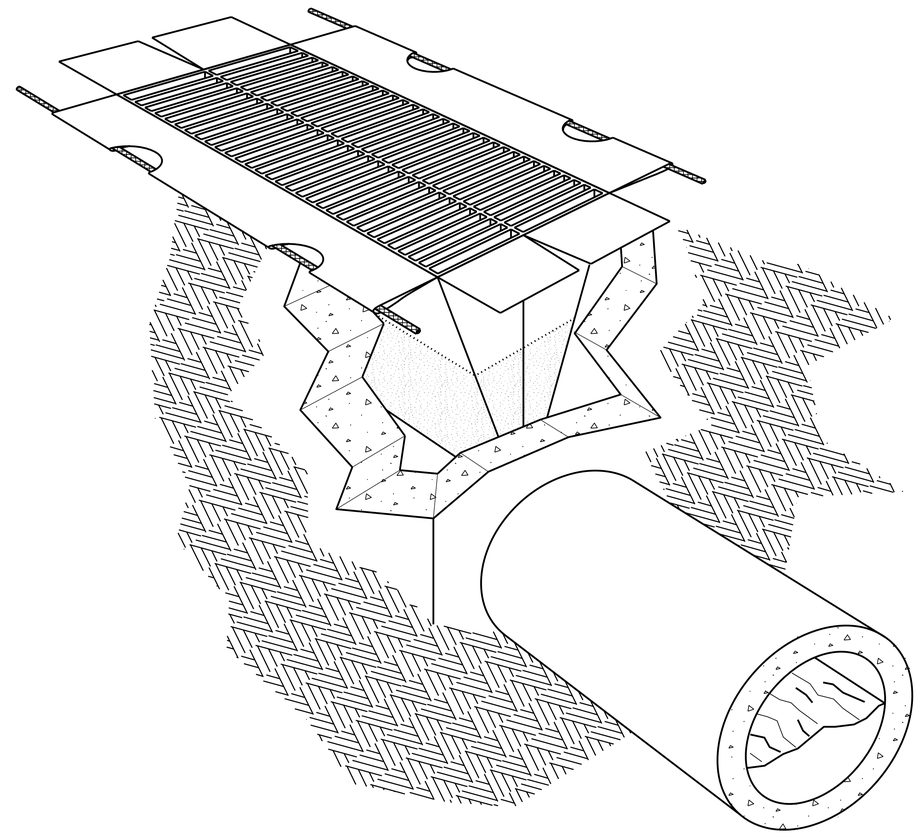

INLET LINER DETAILS

ROADWAY DESIGN DIVISION
Computer: DRDESIGN147
User: dor13017
Date: 18-APR-2016 09:11
File: 54805e01.dgn
SHEET SCALE: 1:100

THIS PLAN IS DRAWN AT 100 SCALE.

PROJECT NO.	SHEET NO.

C.N.

ROADWAY DESIGN DIVISION

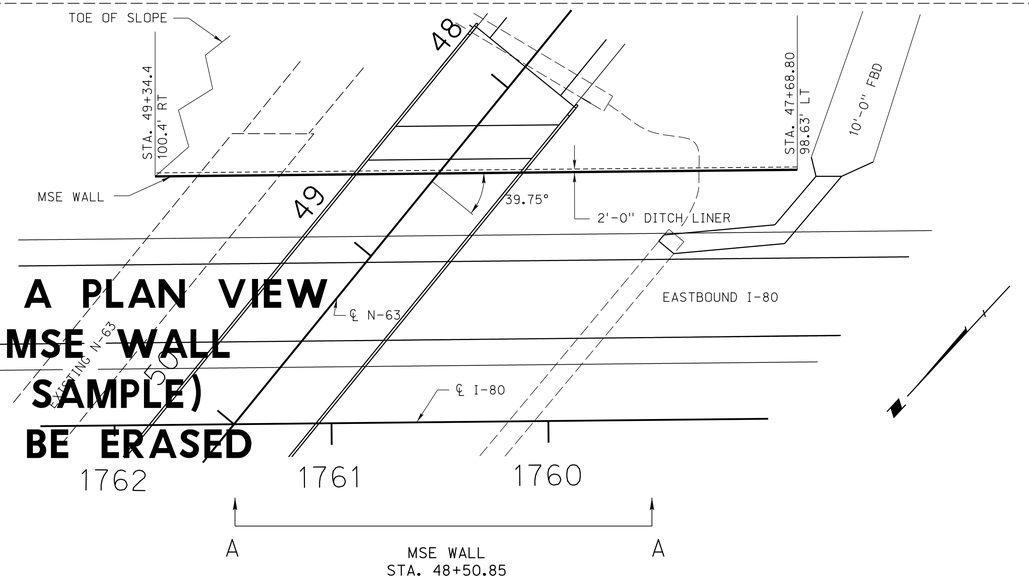

REFERENCE A PLAN VIEW OF YOUR MSE WALL (LIKE THIS SAMPLE) BOX WILL BE ERASED

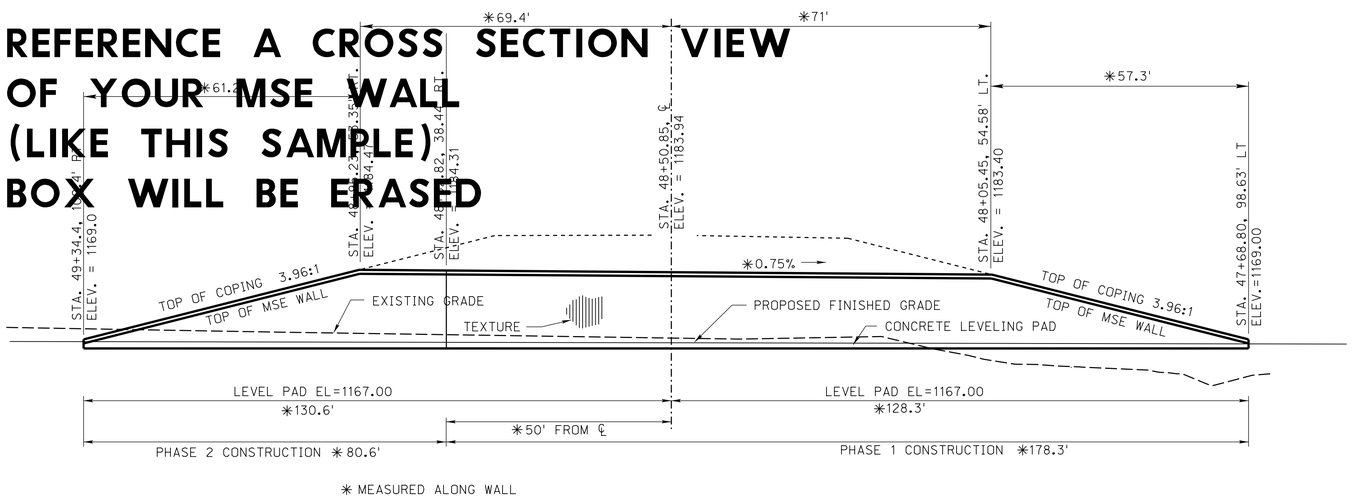

REFERENCE A CROSS SECTION VIEW OF YOUR MSE WALL (LIKE THIS SAMPLE) BOX WILL BE ERASED

ELEVATION AT ABUTMENT NO. 1
VIEW A-A

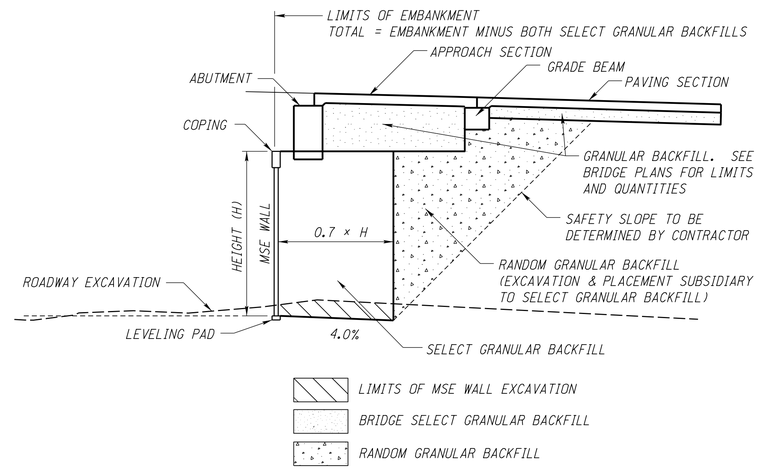

TYPICAL SECTION OF BACKFILL AT ABUTMENT
(NOT TO SCALE)

WARP FILL SLOPE AROUND BLUNT ENDS OF WALL.

GRANULAR BACKFILL SHALL BE CAPPED WITH 1 FOOT OF COHESIVE SOIL.

MSE WALL TEXTURE:

THE FRONT FACE OF THE MSE WALL SHALL BE TEXTURED USING SYMONS FORM LINERS FRACTURED GRANITE PATTERN (P/C30611 OR P/C30907), OR FITZGERALD FORM LINERS PATTERN NO. 16980 OR AN APPROVED EQUAL.

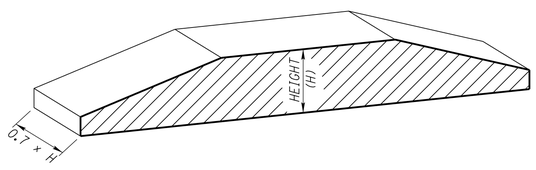

$$\text{VOLUME OF SELECT GRANULAR BACKFILL} = \frac{(0.7 \times H) \times \text{WALL AREA (SQ. FT.)}}{27}$$

SUMMARY OF QUANTITIES

LOCATION	* CONCRETE FACE PANELS SQ. FT.	SELECT GRANULAR BACKFILL CU. YD.	COPING LIN. FT.	LEVELING PAD LIN. FT.	** 24" CORRUGATED METAL PIPE SLEEVES	MSE WALL EXC. CU. YD.
ABUT. #1	*	*	*	*	*	*

* MEASURED FROM CONCRETE LEVELING PAD TO TOP OF COPING
** SEE BRIDGE PLANS FOR CORRUGATED METAL PIPE LAYOUT

MECHANICALLY STABILIZED EARTH WALL

SHEET 1 OF 2

SPECIAL PLAN C

Computer: DRDESIGN147
User: dor13017
Date: 18-APR-2016 09:11
File: 62005e01.dgn
Scale: 1:100

PROJECT NO.	SHEET NO.

C.N.

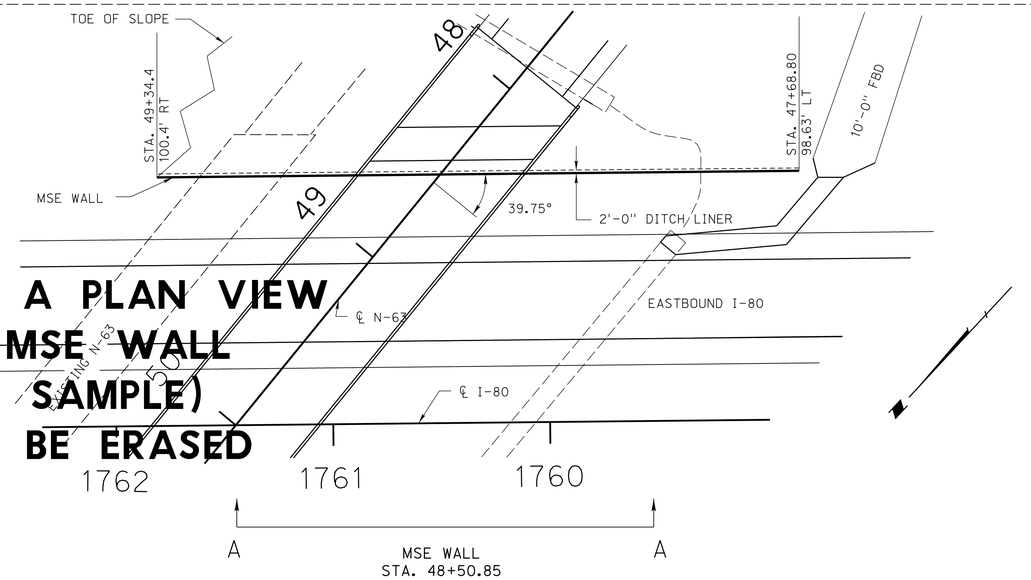

REFERENCE A PLAN VIEW OF YOUR MSE WALL (LIKE THIS SAMPLE) BOX WILL BE ERASED

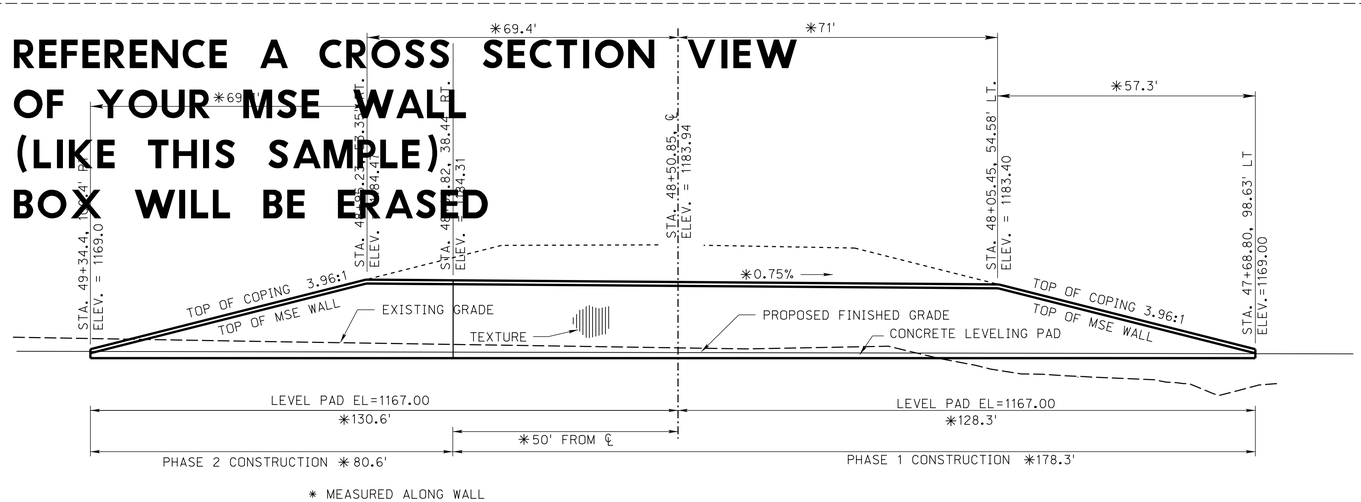

REFERENCE A CROSS SECTION VIEW OF YOUR MSE WALL (LIKE THIS SAMPLE) BOX WILL BE ERASED

ELEVATION AT ABUTMENT NO. 1
VIEW A-A

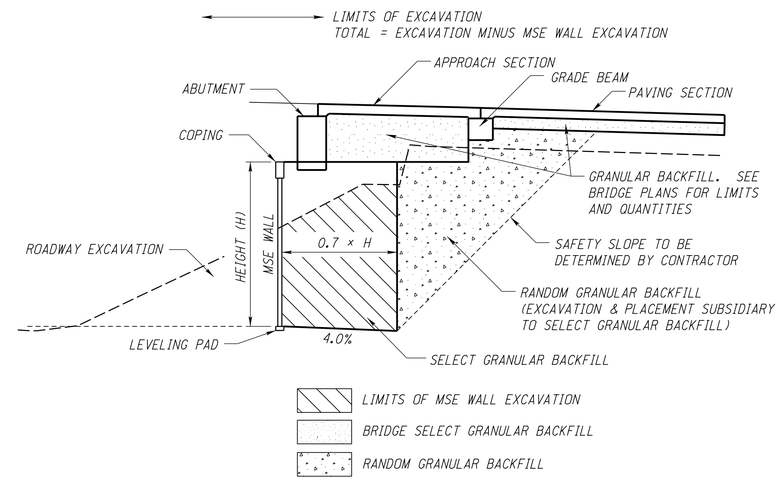

TYPICAL SECTION OF BACKFILL AT ABUTMENT
(NOT TO SCALE)

WARP FILL SLOPE AROUND BLUNT ENDS OF WALL.

GRANULAR BACKFILL SHALL BE CAPPED WITH 1 FOOT OF COHESIVE SOIL.

MSE WALL TEXTURE:

THE FRONT FACE OF THE MSE WALL SHALL BE TEXTURED USING SYMONS FORM LINERS FRACTURED GRANITE PATTERN (P/C30611 OR P/C30907), OR FITZGERALD FORM LINERS PATTERN NO. 16980 OR AN APPROVED EQUAL.

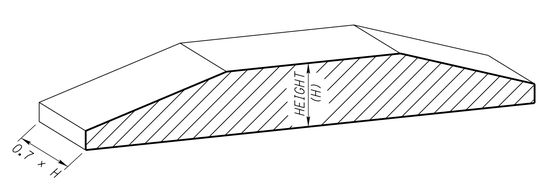

VOLUME OF SELECT GRANULAR BACKFILL $= \frac{(0.7 \times H) \times \text{WALL AREA (SQ. FT.)}}{27}$

SUMMARY OF QUANTITIES

LOCATION	* CONCRETE FACE PANELS SQ. FT.	SELECT GRANULAR BACKFILL CU. YD.	COPING (LIN. FT.	LEVELING PAD LIN. FT.	** 24" CORRUGATED METAL PIPE SLEEVES	MSE WALL EXC. CU. YD.
ABUT. #1	*	*	*	*	*	*

* MEASURED FROM CONCRETE LEVELING PAD TO TOP OF COPING
** SEE BRIDGE PLANS FOR CORRUGATED METAL PIPE LAYOUT

MECHANICALLY STABILIZED EARTH WALL

SHEET 1 OF 2

SPECIAL PLAN C

ROADWAY DESIGN DIVISION

Computer: DRDESIGN147

User: dor13017

Date: 18-APR-2016 09:11

File: 62005e01.dgn
Scale: 1:100

PROJECT NO.	SHEET NO.

C.N.

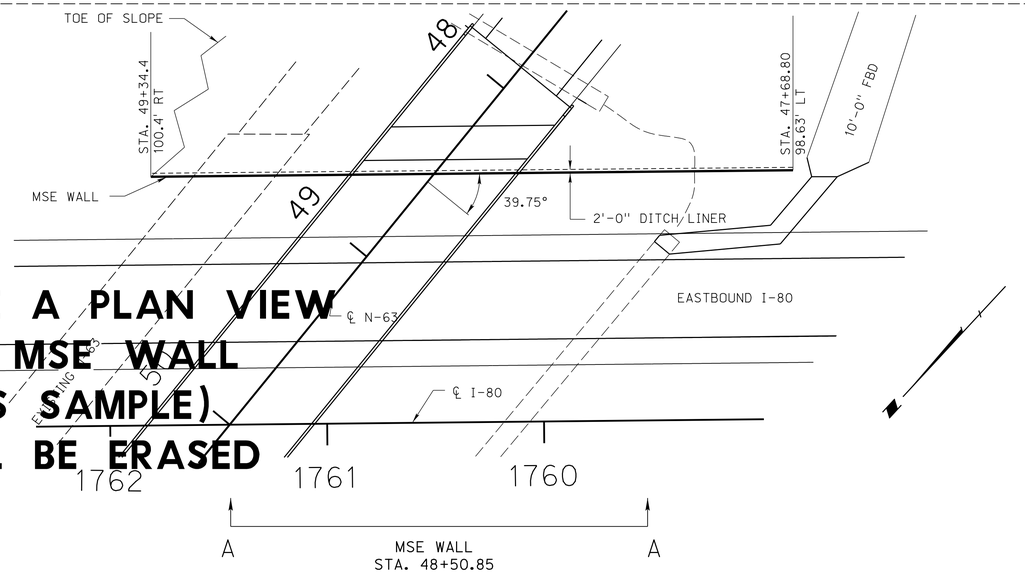

REFERENCE A PLAN VIEW OF YOUR MSE WALL (LIKE THIS SAMPLE) BOX WILL BE ERASED

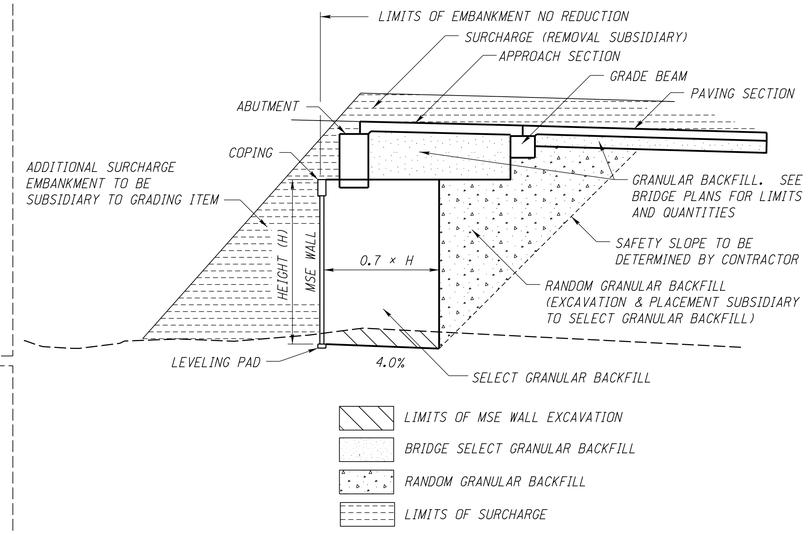

TYPICAL SECTION OF BACKFILL AT ABUTMENT
(NOT TO SCALE)

REFERENCE A CROSS SECTION VIEW OF YOUR MSE WALL (LIKE THIS SAMPLE) BOX WILL BE ERASED

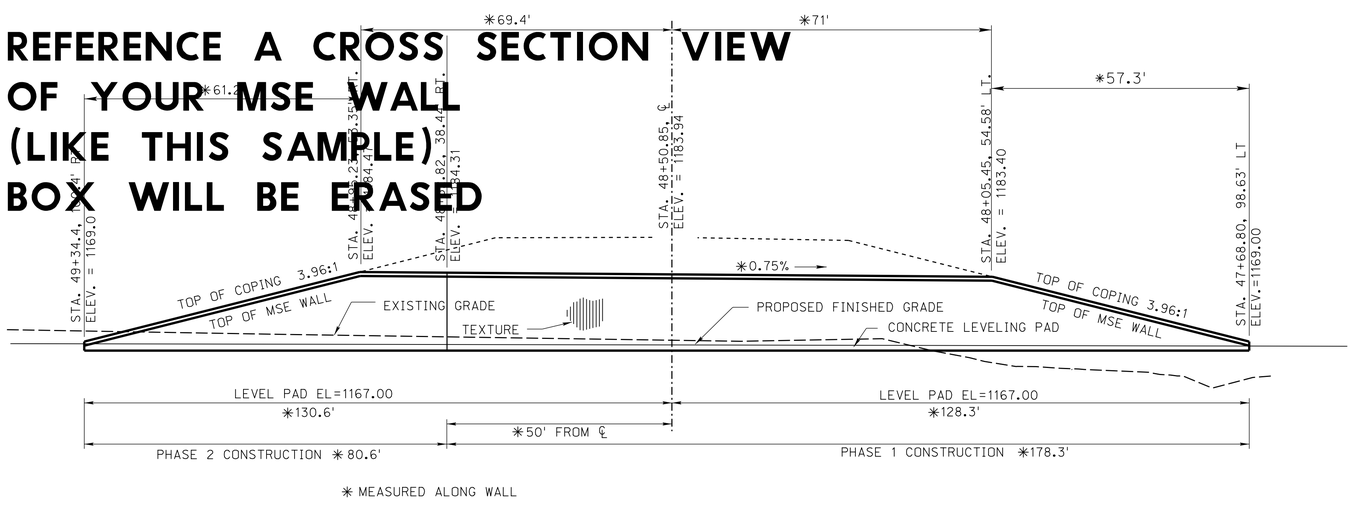

ELEVATION AT ABUTMENT NO. 1
VIEW A-A

WARP FILL SLOPE AROUND BLUNT ENDS OF WALL.

GRANULAR BACKFILL SHALL BE CAPPED WITH 1 FOOT OF COHESIVE SOIL.

MSE WALL TEXTURE:

THE FRONT FACE OF THE MSE WALL SHALL BE TEXTURED USING SYMONS FORM LINERS FRACTURED GRANITE PATTERN (P/C30611 OR P/C30907), OR FITZGERALD FORM LINERS PATTERN NO. 16980 OR AN APPROVED EQUAL.

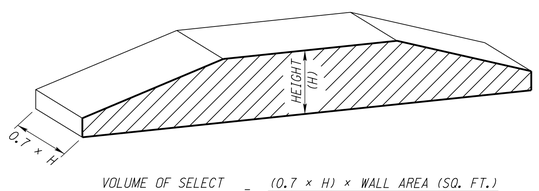

VOLUME OF SELECT GRANULAR BACKFILL $= \frac{(0.7 \times H) \times \text{WALL AREA (SQ. FT.)}}{27}$

SUMMARY OF QUANTITIES

LOCATION	* CONCRETE FACE PANELS (SQ. FT.)	SELECT GRANULAR BACKFILL (CU. YD.)	COPING (LIN. FT.)	LEVELING PAD (LIN. FT.)	** 24" CORRUGATED METAL PIPE SLEEVES	MSE WALL EXC. (CU. YD.)
ABUT. #1	*	*	*	*	*	*

* MEASURED FROM CONCRETE LEVELING PAD TO TOP OF COPING
** SEE BRIDGE PLANS FOR CORRUGATED METAL PIPE LAYOUT

MECHANICALLY STABILIZED EARTH WALL

SHEET 1 OF 2

SPECIAL PLAN C

ROADWAY DESIGN DIVISION
Computer: DRDESIGN147
User: dor13017
Date: 18-APR-2016 09:11
File: 62005e01.dgn
Scale: 1:100

PROJECT NO.	SHEET NO.

C.N.

ROADWAY DESIGN DIVISION

Computer: DRDESIGN147

User: dor13017

Date: 18-APR-2016 09:11

File: 62005g01.dgn

Scale: 1:100

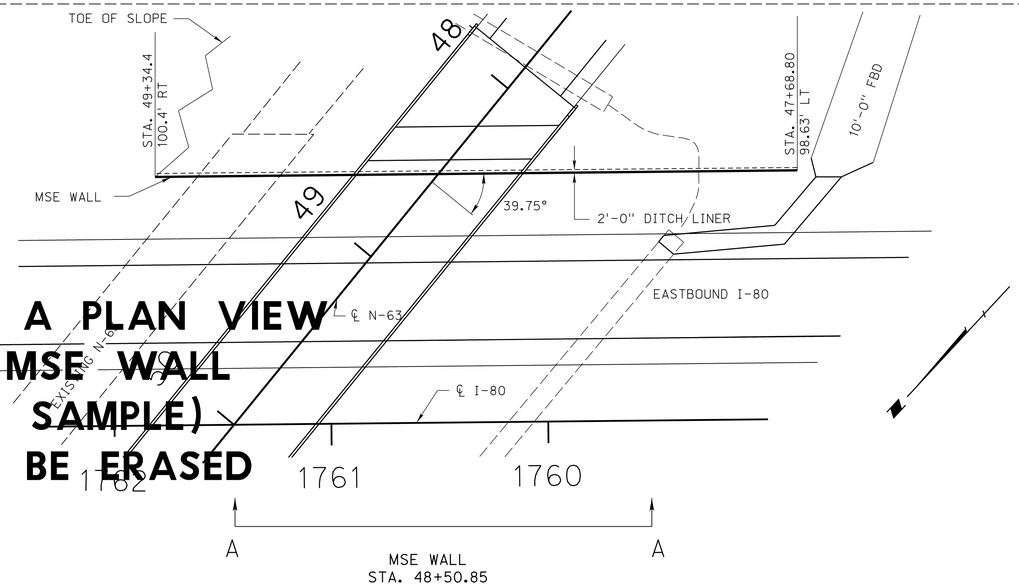

REFERENCE A PLAN VIEW OF YOUR MSE WALL (LIKE THIS SAMPLE) BOX WILL BE ERASED

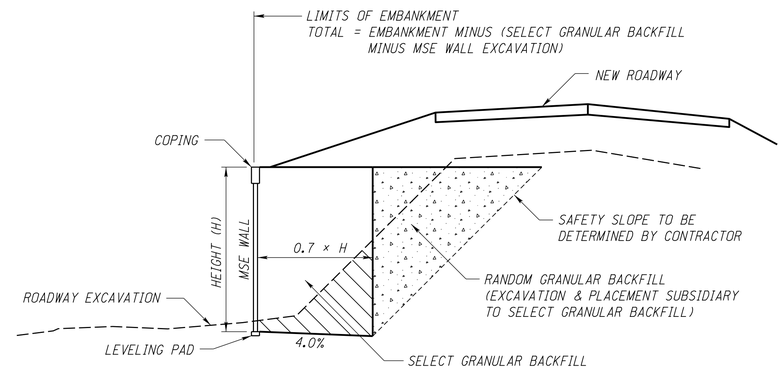

TYPICAL SECTION OF BACKFILL
(NOT TO SCALE)

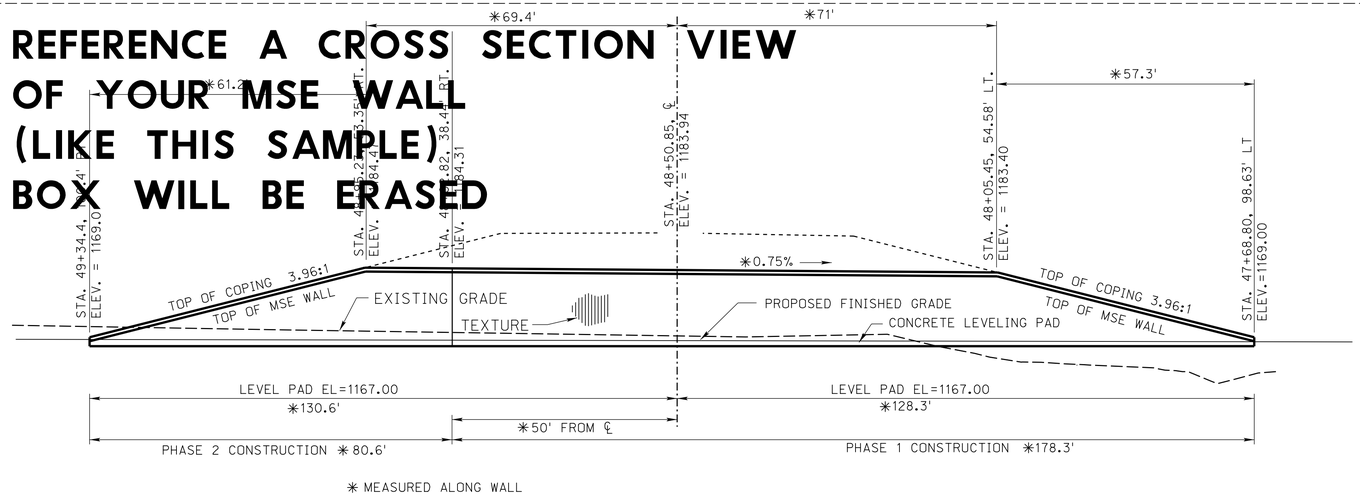

REFERENCE A CROSS SECTION VIEW OF YOUR MSE WALL (LIKE THIS SAMPLE) BOX WILL BE ERASED

ELEVATION AT ABUTMENT NO. 1
VIEW A-A

WARP FILL SLOPE AROUND BLUNT ENDS OF WALL.

GRANULAR BACKFILL SHALL BE CAPPED WITH 3 FEET OF SOIL.

MSE WALL TEXTURE:

THE FRONT FACE OF THE MSE WALL SHALL BE TEXTURED USING SYMONS FORM LINERS FRACTURED GRANITE PATTERN (P/C30611 OR P/C30907), OR FITZGERALD FORM LINERS PATTERN NO. 16980 OR AN APPROVED EQUAL.

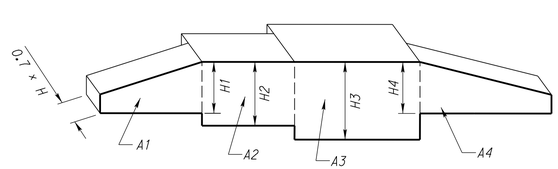

$$\text{VOLUME OF SELECT GRANULAR BACKFILL} = \sum \left(\frac{(0.7 \times H1) \times A1\ (\text{SQ. FT.})}{27}\right) + \left(\frac{(0.7 \times H2) \times A2\ (\text{SQ. FT.})}{27}\right) + \left(\frac{(0.7 \times H3) \times A3\ (\text{SQ. FT.})}{27}\right) + \left(\frac{(0.7 \times H4) \times A4\ (\text{SQ. FT.})}{27}\right)$$

SUMMARY OF QUANTITIES

LOCATION	∗ CONCRETE FACE PANELS (SQ. FT.)	SELECT GRANULAR BACKFILL (CU. YD.)	COPING (LIN. FT.)	LEVELING PAD (LIN. FT.)	∗∗ 24" CORRUGATED METAL PIPE SLEEVES	MSE WALL EXC. (CU. YD.)
ABUT. #1	∗	∗	∗	∗	∗	∗

∗ MEASURED FROM CONCRETE LEVELING PAD TO TOP OF COPING
∗∗ SEE BRIDGE PLANS FOR CORRUGATED METAL PIPE LAYOUT

MECHANICALLY STABILIZED EARTH WALL

SHEET 1 OF 2

SPECIAL PLAN C

PROJECT NO.	SHEET NO.

C.N.

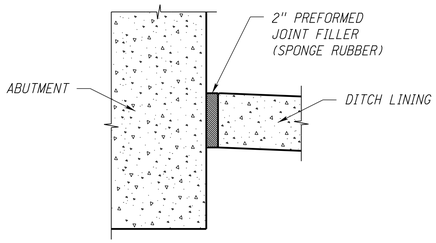

EXPANSION JOINT DETAIL

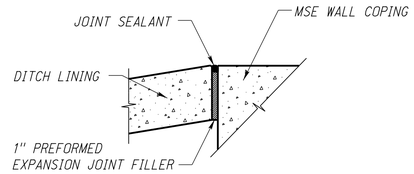

EXPANSION JOINT DETAIL

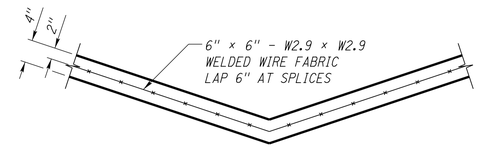

WELDED WIRE FABRIC DETAIL

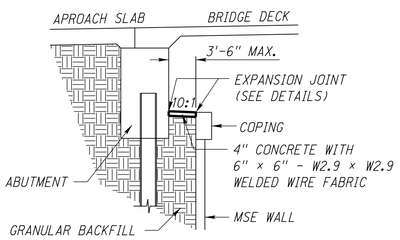

CONCRETE COPING/DITCH LINER DETAIL
(ADJACENT TO ABUTMENT)

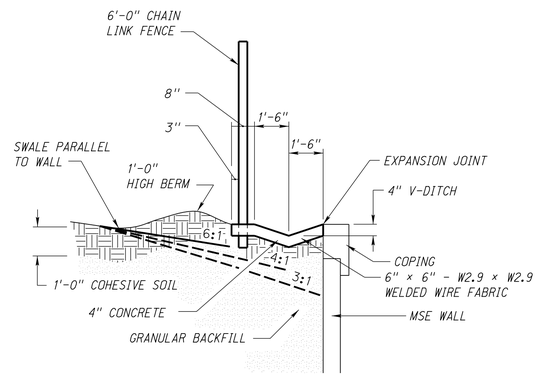

CONCRETE DITCH LINER DETAIL WITH FENCE
(ALONG FORESLOPES)

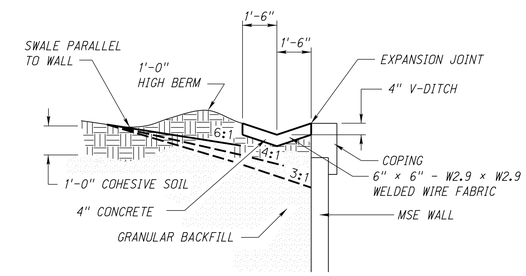

CONCRETE DITCH LINER DETAIL
(ALONG FORESLOPES)

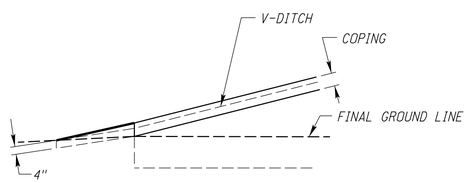

NOTE:
FIELD ENGINEER TO
PLACE AS NEEDED

PLAN
CONCRETE DITCH FLUME DETAIL
(SUBSIDIARY)

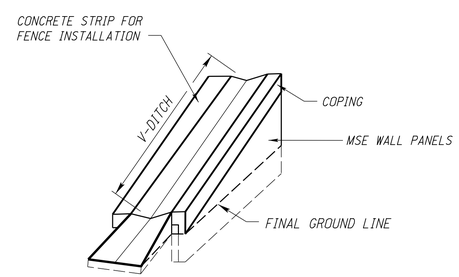

NOTE:
FIELD ENGINEER TO
PLACE AS NEEDED

ELEVATION
CONCRETE DITCH FLUME
DETAIL WITH FENCE
(SUBSIDIARY)

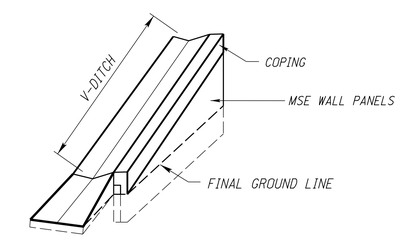

NOTE:
FIELD ENGINEER TO
PLACE AS NEEDED

ELEVATION
CONCRETE DITCH FLUME DETAIL
(SUBSIDIARY)

MECHANICALLY STABILIZED
EARTH WALL

SHEET 2 OF 2

SPECIAL PLAN C

ROADWAY DESIGN DIVISION
Computer: DRDESIGN147
User: dor13017
Date: 18-APR-2016 09:11
File: 62005e01.dgn
Scale: 1:100

PROJECT NO.	SHEET NO.

C.N.

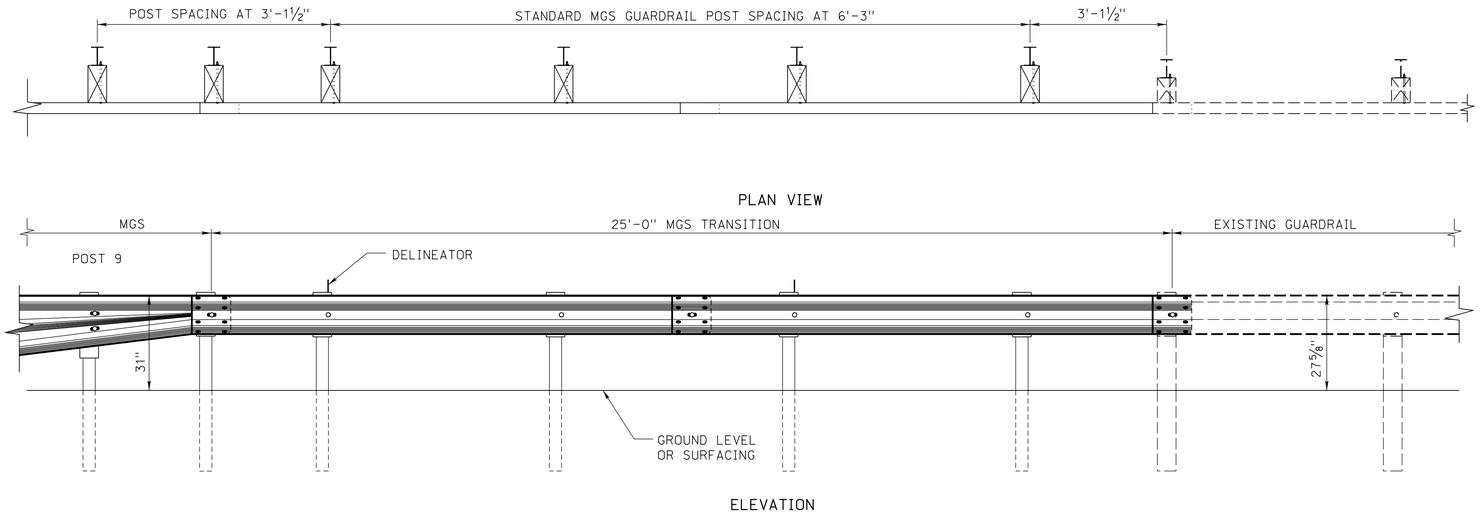

VIEW 1 - 31" BAS FOR MGS TRANSITION TO W-BEAM

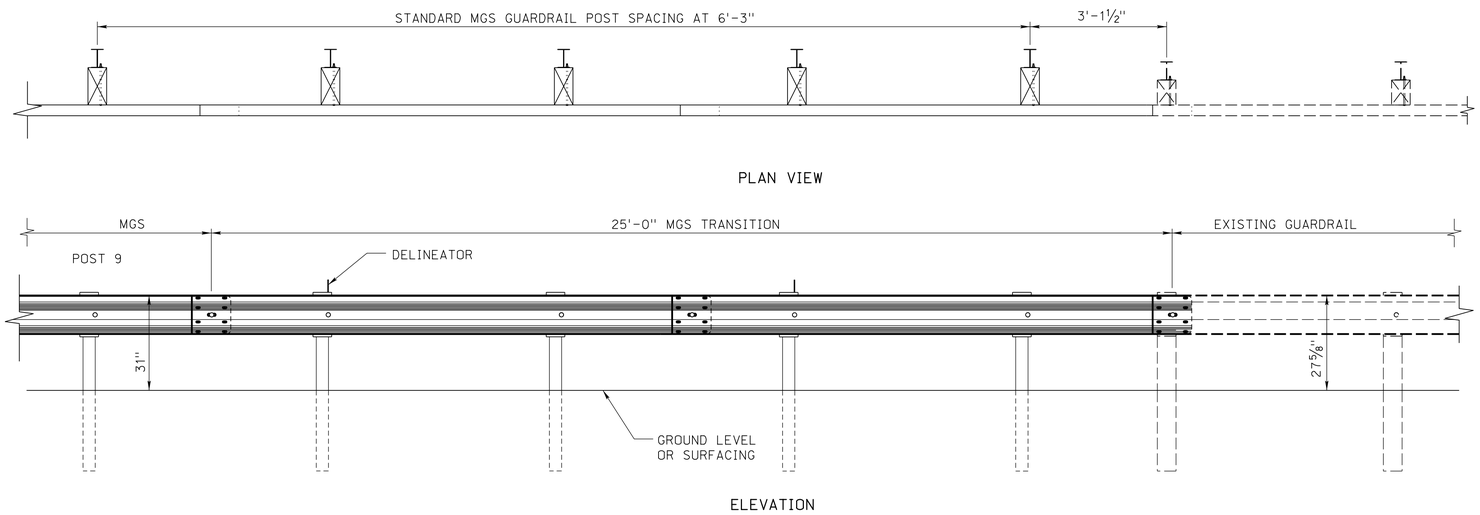

VIEW 2 - MGS TRANSITION TO W-BEAM

ROADWAY DESIGN DIVISION
Computer: DRDESIGN147
User: dor13017
Date: 18-APR-2016 09:11
File: 70385e00.dgn
Scale: 1:100

PROJECT NO.	SHEET NO.

C.N.

FOR PDU INFORMATION: PLACE DETAILS INSIDE BLUE BOX ON GUARDRAIL LAYOUT SPECIAL PLAN SHEETS.

RADIUS (R) @ BACK OF RAIL	NUMBER OF CRT POSTS		CURVED BEAM INFORMATION			
	ON CURVE (Δ= 90°)	ON TANGENT	L	C	H	ø
15.92'	5	1	25.00'	12.18'	1.21'	45°
19.89'	6	1	31.25'	12.30'	0.97'	36°
27.85'	8	1	43.75'	12.40'	0.70'	25°45''
35.81'	10	1	56.25'	12.44'	0.54'	20°

NOTE:
SHOP BEND GUARDRAIL WHEN RADIUS IS SHARPER THAN 150'.

NOTE TO DESIGNERS:
IT IS COMMON PRACTICE TO USE THIS SYSTEM AS A LAST OPTION. USE THIS SYSTEM WITH DISCRETION UNTIL ANOTHER SYSTEM IS DEVELOPED.

RADIUS (R) @ BACK OF RAIL	W1	W2
15.92'	30'	15'
19.89'	40'	20'
27.85'	50'	20'
35.81'	50'	20'

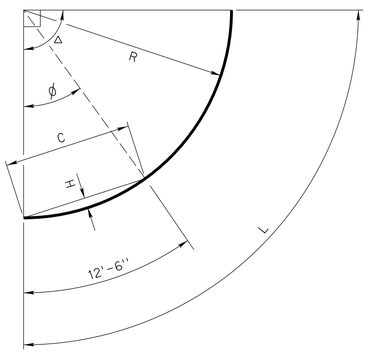

DETAIL OF CURVED BEAM

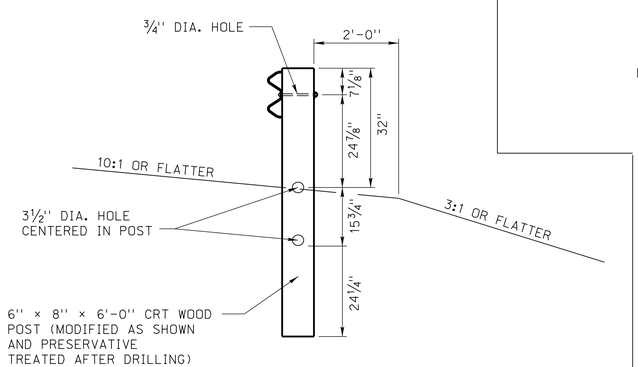

DETAIL OF CONTROLLED RELEASING
TERMINAL POST (CRT)

END TREATMENT TABLE	
✳ TYPE OF INT.	END TREATEMENT
DRIVEWAY	END ANCHORAGE ASSEMBLY
COUNTY ROAD	TYPE II
STATE HIGHWAY	TYPE I OR II

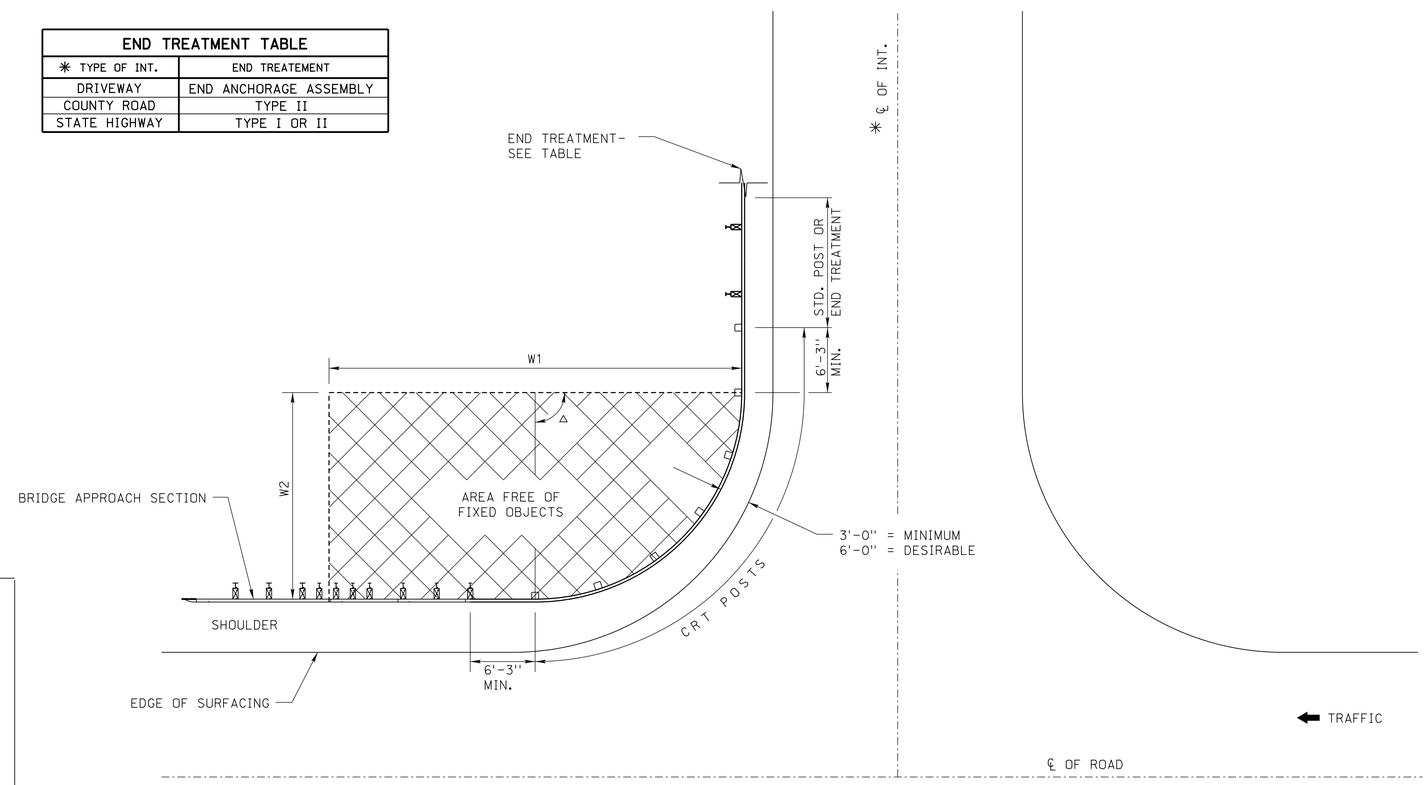

EXAMPLE OF CURVED BEAM INSTALLATION

CURVED BEAM DESIGN GUIDE

ROADWAY DESIGN DIVISION

Computer: DRDESIGN147

User: dor13017

Date: 18-APR-2016 09:11

File: 70465e02.dgn
Scale: 1:100

SHEET OF

PROJECT NO.	SHEET NO.

C.N.

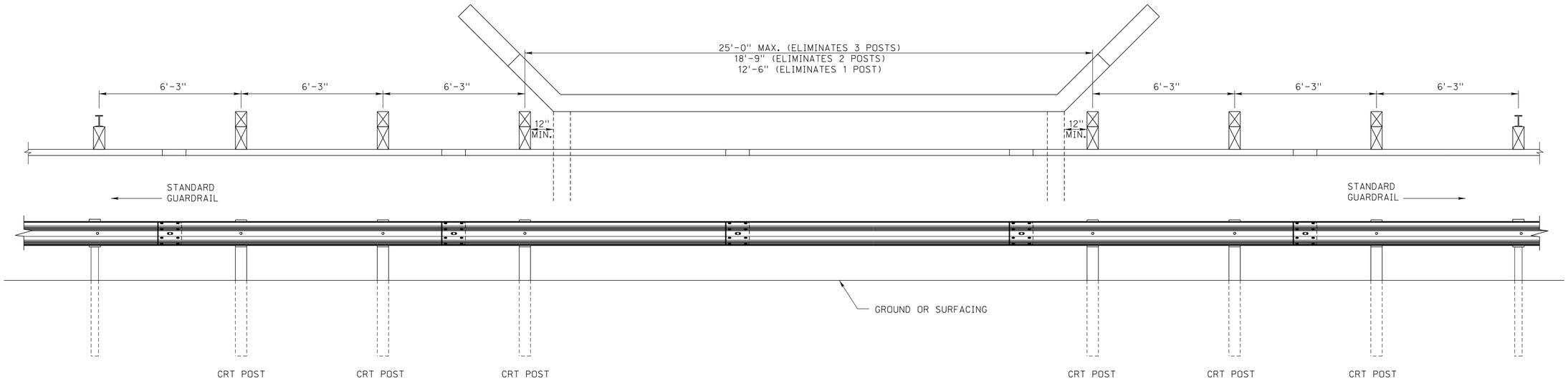

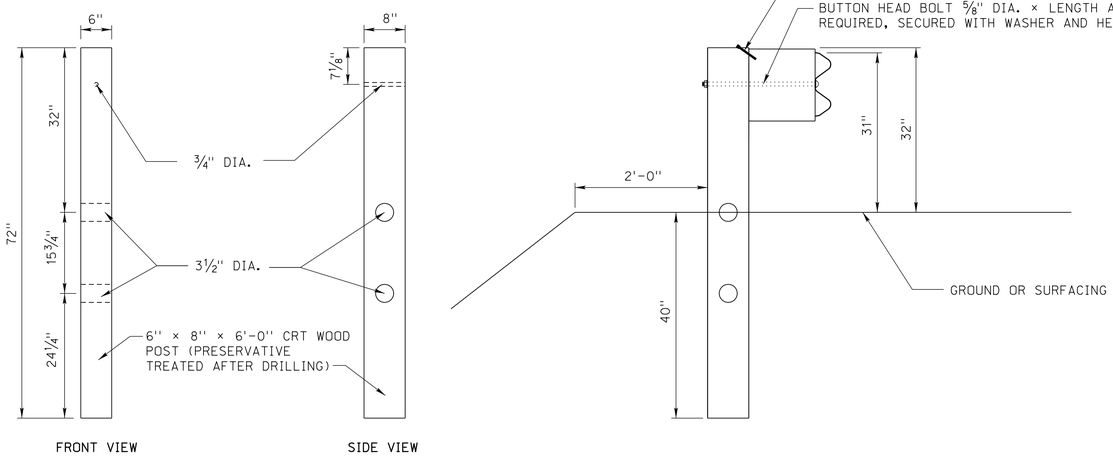

DETAIL OF CONTROLLED RELEASING TERMINAL POST (CRT)

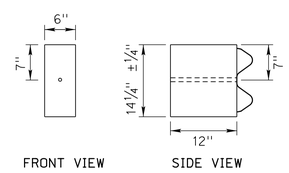

DETAIL OF BLOCKOUT

FOR PDU INFORMATION: PLACE DETAILS INSIDE BLUE BOX ON GUARDRAIL LAYOUT SPECIAL PLAN SHEETS.

MGS FOR LONG SPAN

ROADWAY DESIGN DIVISION

Computer: DRDESIGN147 User: dor13017 Date: 18-APR-2016 09:11

File: 70495e00.dgn
SHEET SCALE: 1:100

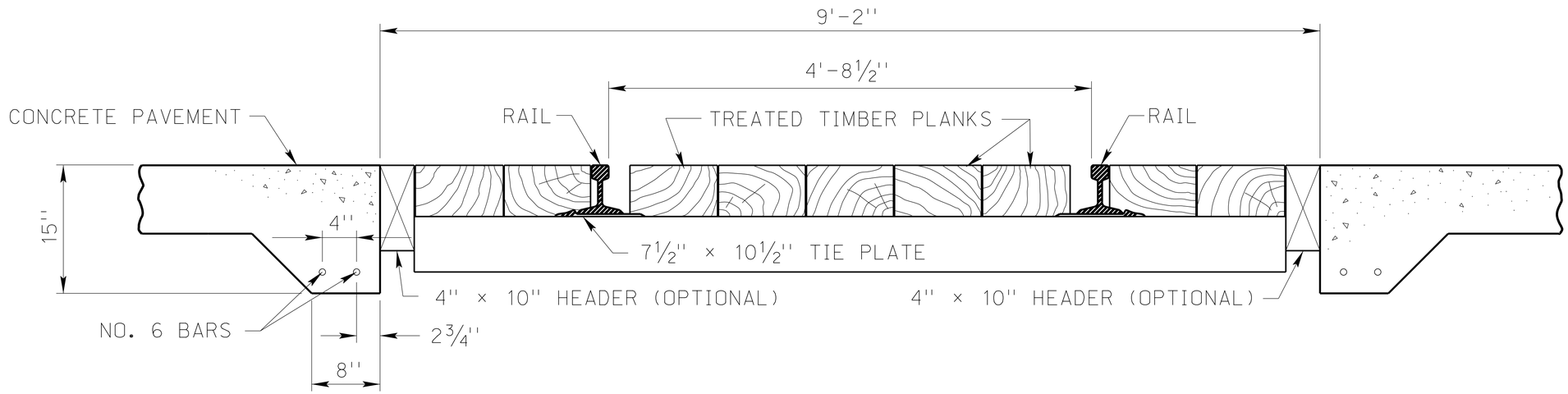

SECTION OF TIMBER PLANK CROSSING

(TYPICAL)

WIDER TREATED TIMBER PLANK MAY BE SUBSTITUTED
FOR THE OPTIONAL 4'' × 10'' HEADER AND ADJACENT PLANK
WHEN 9'-0'' TIES ARE USED IN CROSSING CONSTRUCTION.

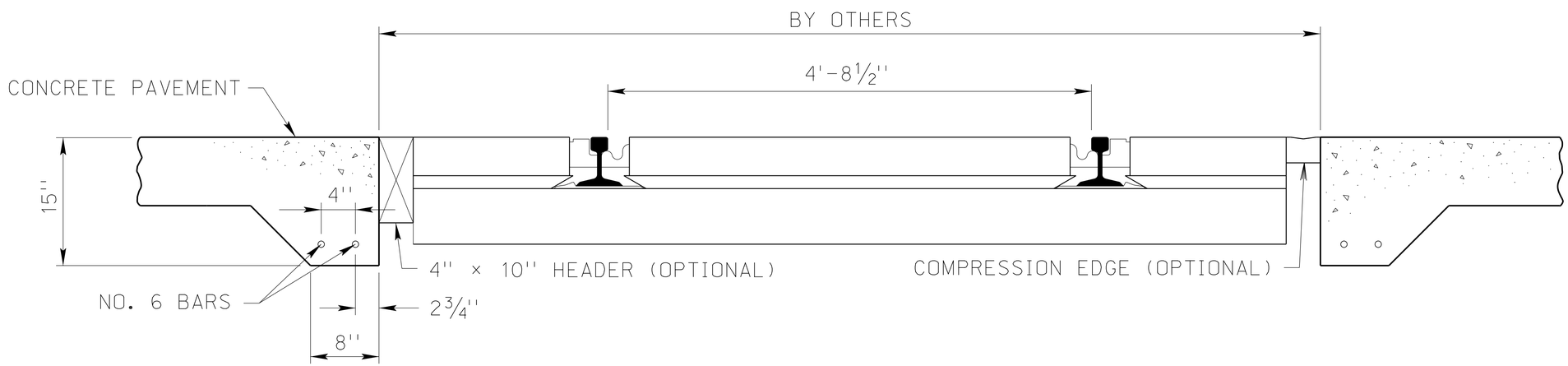

SECTION OF RUBBERIZED CROSSING

NOTE: DROP INTEGRAL CURB 6'-0'' FROM RAILROAD CROSSING

THIS PLAN IS DRAWN AT 200 SCALE.

ROADWAY DESIGN DIVISION
Computer: DRDESIGN147
User: dor13017
Date: 18-APR-2016 09:11
File: 83505e01.dgn
Scale: 1:100
SHEET 1 OF 1